PROPRIETARY AND CONFIDENTIAL

THE INFORMATION CONTAINED IN THIS DRAWING IS THE SOLE PROPERTY OF ARDENT CONCEPTS, INC. ANY REPRODUCTION IN PART OR AS A WHOLE WITHOUT THE WRITTEN PERMISSION OF ARDENT CONCEPTS, INC. IS PROHIBITED.

REVISIONS

REV.	DESCRIPTION	DATE	APPROVED
A	RELEASED, ECN08-0322	07/24/08	SD

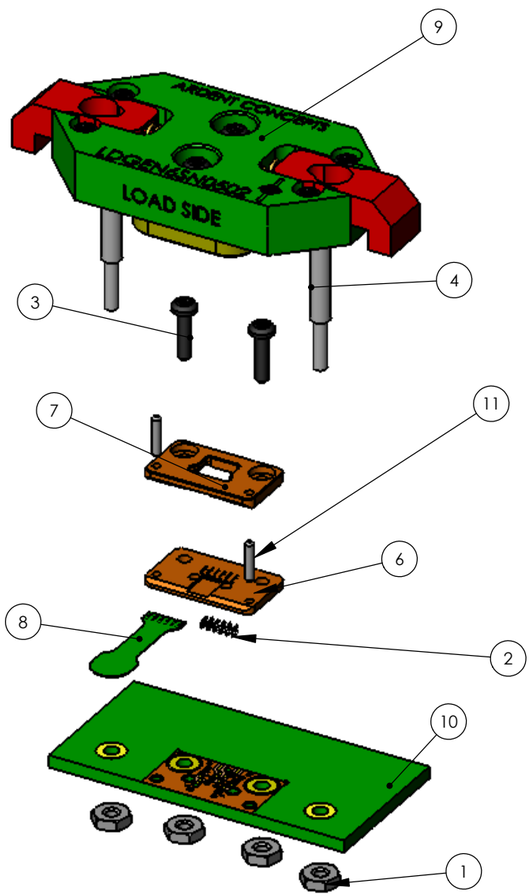

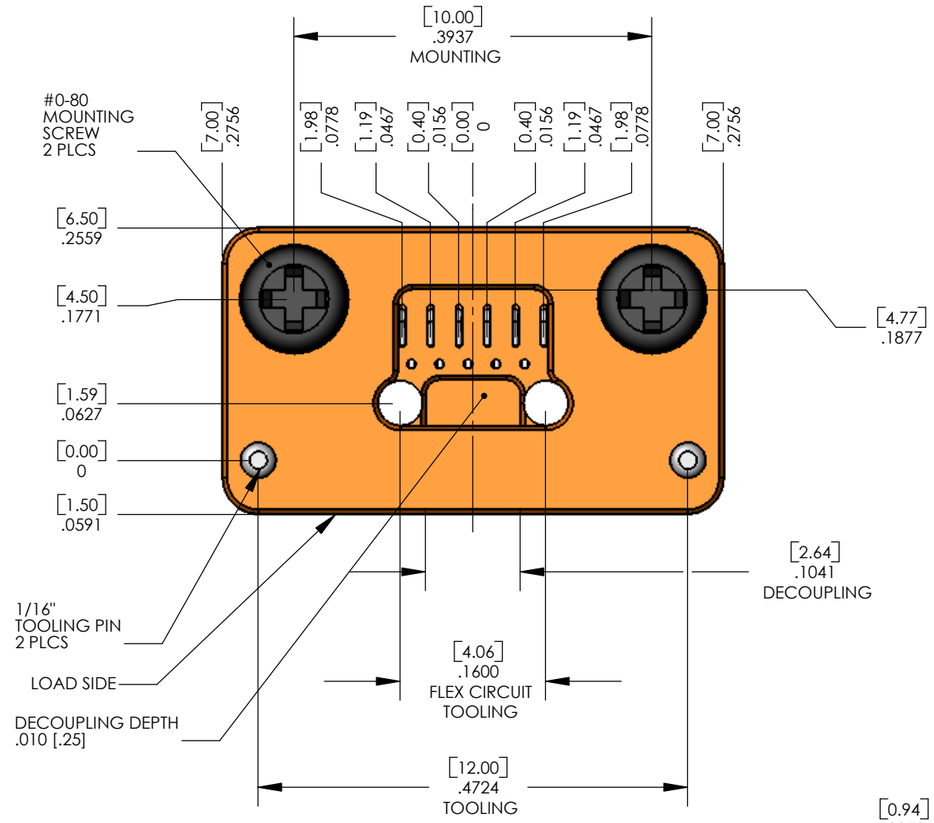

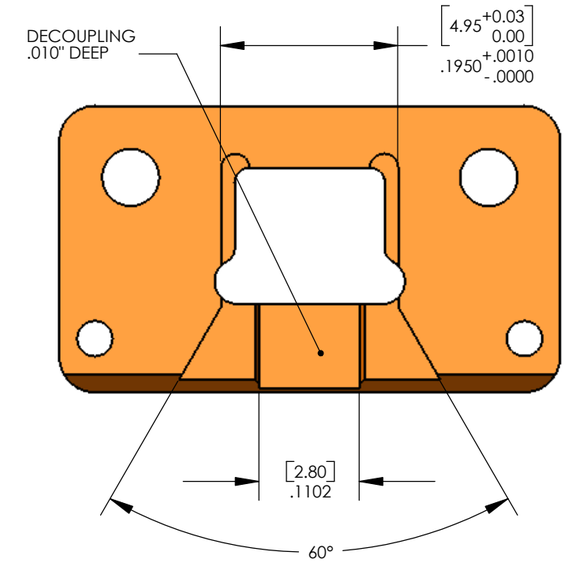

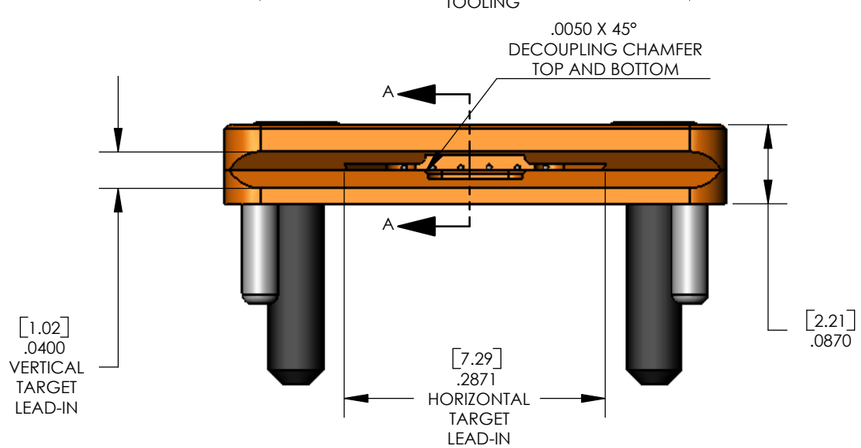

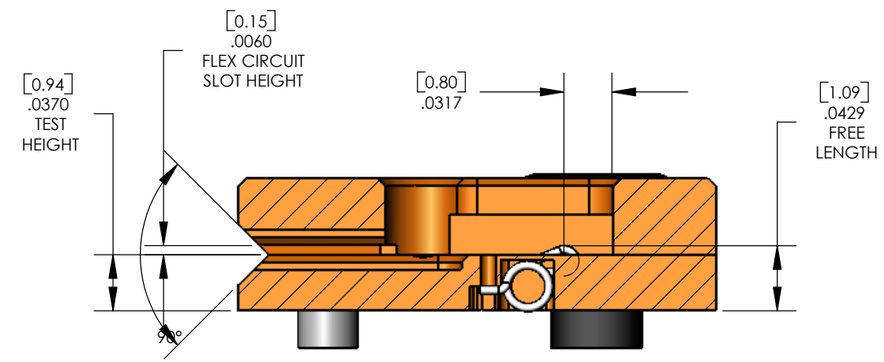

SECTION A-A
SCALE 10 : 1

ITEM NO.	PART NUMBER	DESCRIPTION	Default/QTY.
1	080NUT	0-80 NUT	4
2	SC05-06	.5mm .005" Pal-7 RC Scrub-R	6
3	080PHCS0250	#0-80 PAN HEAD SCREW X 1/4"L	2
4	080FHSB094L050	0-80 SHOULDER BOLT .094DIAX.500"L	2
5	SCGEN6SN0503	SHIPPING COVER	1
6	INGEN6SN0504	INSULATOR	1
7	GPGEN6SN0504	GUIDE PLATE	1
8	FCGEN6LG0504	FLEX CIRCUIT SPECIFICATION	REF
9	LDGEN6SN0504	LID ASSEMBLY	1
10	FPGEN6SN0502	FOOTPRINT SPECIFICATION	REF
11	M10DP05	M1 DOWEL PIN X 5mm	2

INCH
UNLESS OTHERWISE SPECIFIED.

TOLERANCES:
ANGLES: ± 3
X.XX = ±.005
X.XXX = ±.002
X.XXXX = ±.001

CHANGE | NOTE | PROJECTION

MATERIAL ---

FINISH ---

DRAWN SD DATE 05/30/08

CHECKED

ENG APPR.

ARDENT CONCEPTS
4 MERRILL INDUSTRIAL DR. SUITE 102
HAMPTON, NH 03842
(603) 926-2517

SIZE B

TITLE: CONNECTOR ASSEMBLY

INTERPRET GEOMETRIC TOLERANCING PER: ANSI Y14.5M 1982

DWG. NO. CAGEN6SN0504

REV A

WWW.ARDENTCONCEPTS.COM

SCALE: 1:1 | WEIGHT: | SHEET 1 OF 1