MECHANICAL

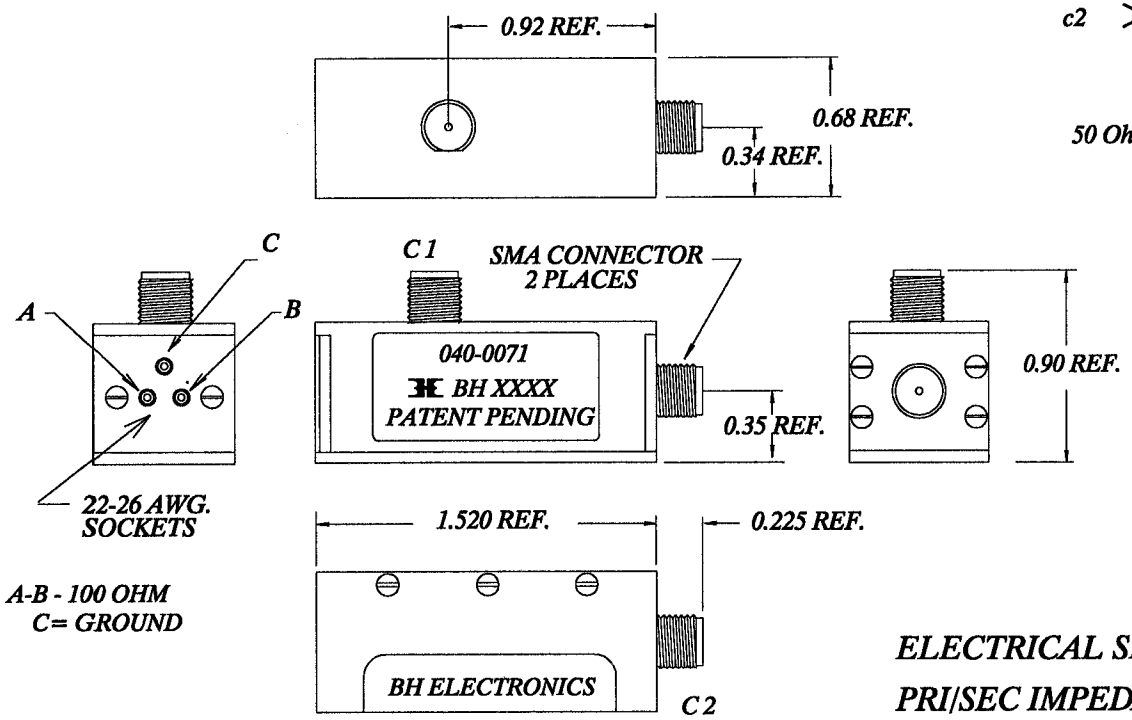

A-B - 100 OHM
C= GROUND

SCHEMATIC

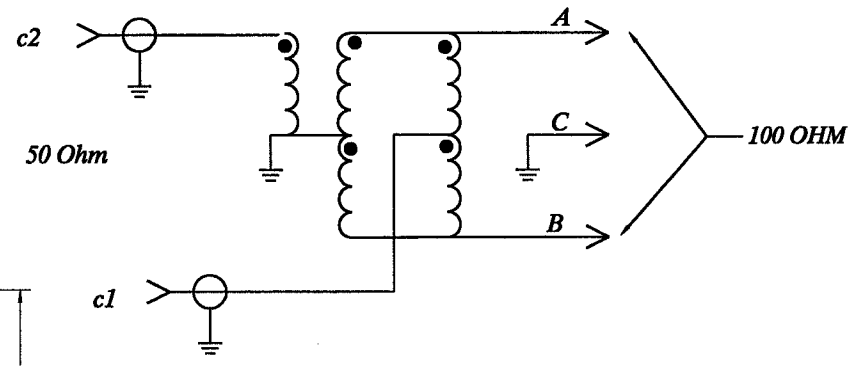

ELECTRICAL SPECIFICATIONS

PRI/SEC IMPEDANCE: 50 OHMS UNBAL: 100 OHMS BAL
INSERTION LOSS: 1.2dB MAX. 100 KHz - 100 MHz
RETURN LOSS (50:100): 20dB MIN. 100 KHz - 50 MHz
15dB MIN. 50 MHz - 100 MHz
RETURN LOSS (100:50): 20dB MIN. 100 KHz - 50 MHz
15dB MIN. 50 MHz - 100 MHz
RETURN LOSS, COMMON MODE: 20dB MIN. 100 KHz - 100 MHz
LONGITUDINAL BALANCE: 60dB MIN. 100 KHz - 50 MHz
50dB MIN. 50 MHz - 100 MHz

ISSUE	DATE	REVISION	BY
B	4-17-00	UPDATE ELECTRICAL SPECS.	nDS
A	12-6-99	CUSTOMER PRINT (Q10231)	JDC

DESIGNED PER:
BH CATALOG

DRAWN Kathy Loftus
ENGR. N. DOOSE

UNLESS OTHERWISE SPECIFIED:
DIMENSIONS IN INCHES, TOLERANCES
NON-CUMULATIVE.
.XX±.01 .XXX±.005

BH Electronics. Inc.
Burnsville & Marshall, MN

©1998 BH Electronics

TITLE: TEST BALUN, 100 KHz - 100 MHz
50:100 OHMS IMPEDANCE MATCH

PART NO. 040-0071