HSF

Specification:
Current Rating :0.5 A AC/DC.
Withstanding Voltage: 40V AC/DC.
Insulation Resistance: 100MΩ Min.
Contact Resistance: 30mΩ Max.
Operating Temperature:-25° C ~+85° C.

Material:
Insulator:High Temperature Thermoplastic
LCP (UL94V-0).
Contact: Copper Alloy.
Contact Plated : Gold or Tin over Nickel Plated.
Shell: Copper Alloy, Nickel or Gold Plated.
Color: Black .

Mechanical Characteristics:
Contact Insertion Force:4.50 Kgf Max.
Contact Separation Force: 1.00 Kgf Min.

Ordering Information

BT HDMI 19 F X X O 3 B22

- HDMI Type
- 19Pin
- F:Female
- Contact Plating: F:Gold Flash/Tin; J:15u"Gold/Tin; K:30u"Gold/Tin
- Shell Plating: U:Gold Flash; N:Nickel
- Insulation&Packing: M: LCP+Tray; N: LCP+Tube; P:LCP+PE Bag; O:LCP+Tape&Reel
- Contact Shape: 1:Solder Type; 2:Crimp+Solder; 3:SMT Type; 4:Dip Type

Recommended P.C.B Layout(Top Side)
(PCB BOARD TOLERANCE± 0.05)

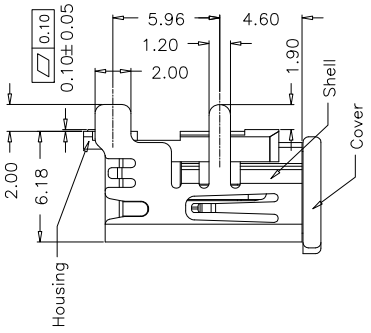

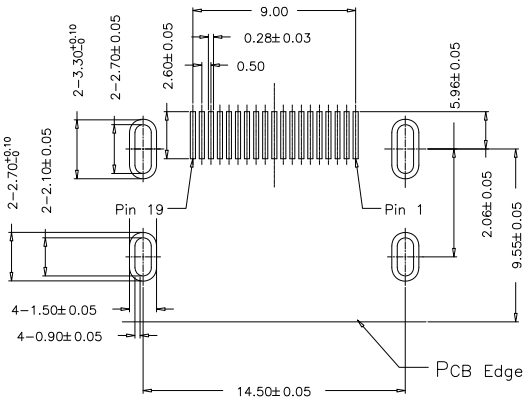

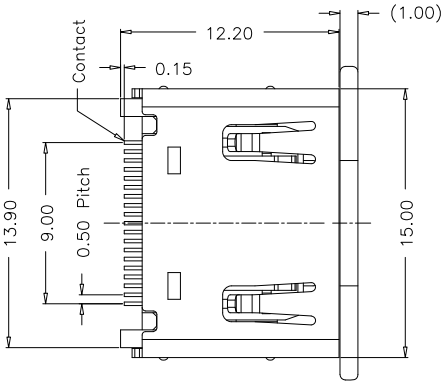

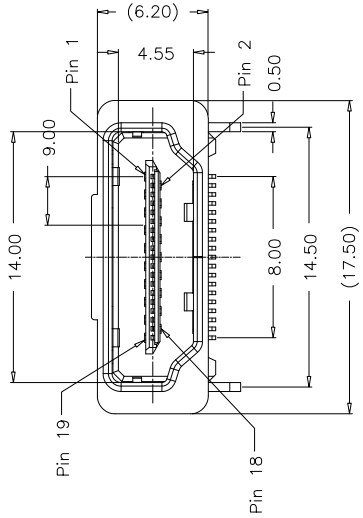

					OPERATION		DRAW	Zhangyalin	09/01/18	SCALE	–	BMA TECHNOLOGIES LTD
					X.X	±0.25	DESIGN			UNIT	mm	
					X.XX	±0.15				SIZE	A4	
A0	09/01/18	NEW	———	———	X.XXX	±0.05	CHECK			SHEET	1/1	PART NO. BTHDMI19FXXO3B20
					Angle	± 5°						
REV	DATE	MODIFICATION DESCRIPTION	CHANGE	APPROVE	DIM	TOL	APPROVE			PROJ.		TITLE: HDMI 19Pin Female R/A SMT Type Connect