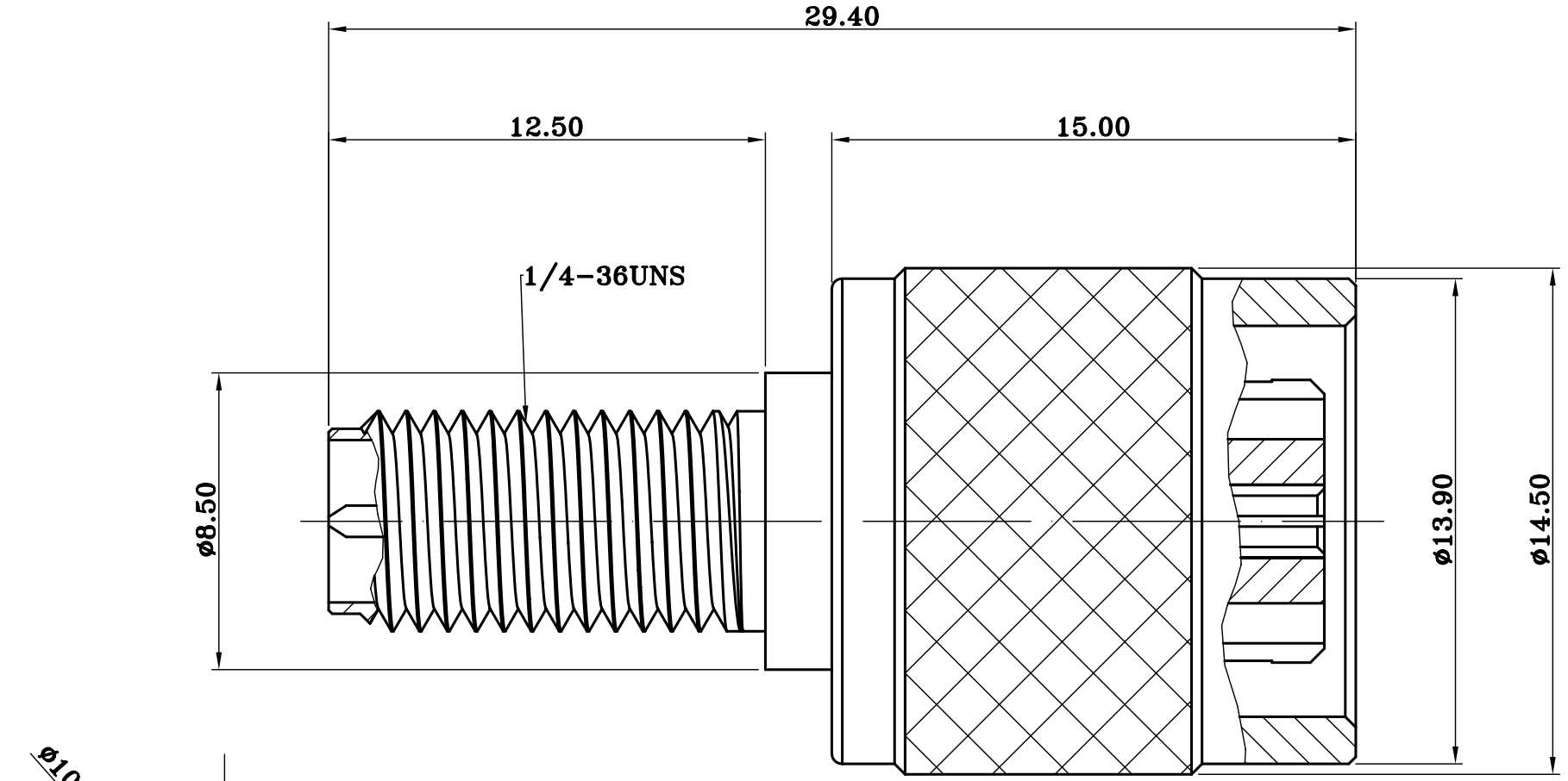

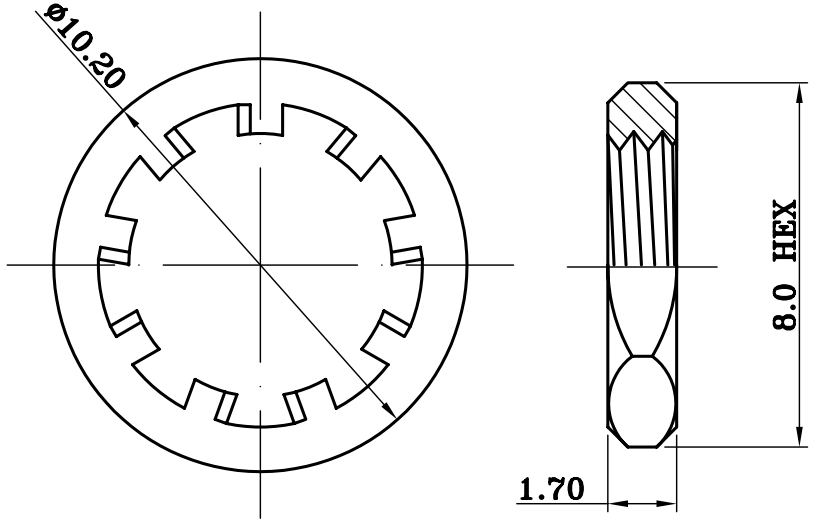

RP SMA JACK TO RP TNC PLUG

REV	CONTENTS	DATE

TOLERANCES
X. ±0.40
.X ±0.30
.XX ±0.20
.XXX ±0.10
X°. ±0.30
.X° ±0.20
.XX° ±0.10

DRAWED	HAO						
CHKD	HAO						
APPD	JORDAN						
MATETIAL	--	SCALE	5:1	SIZE	A4	REV	002
FINISH	--	UNITS	mm	DATE	2009/06/18		

bec Bobbintron Electrical Corp.
www.bobbintron.com

DWG NO: AD-0801T

CUSTOMER --