慈溪市万捷电子有限公司
CIXI WANJIE ELECTRONIC CO., LTD

产品规格书
product specification

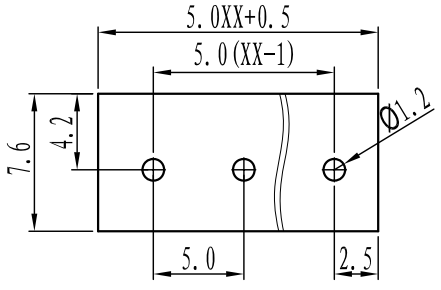

P.C.B. LAYOUT

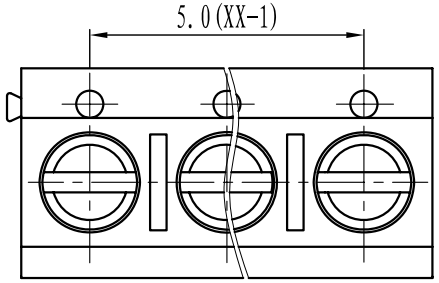

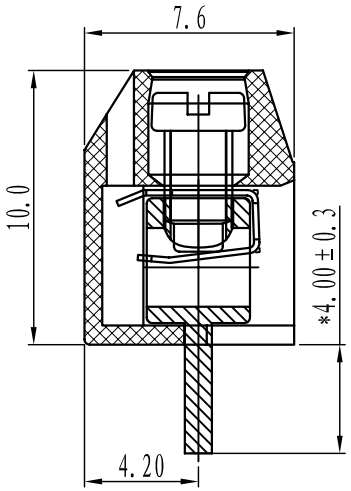

SECTION A-A

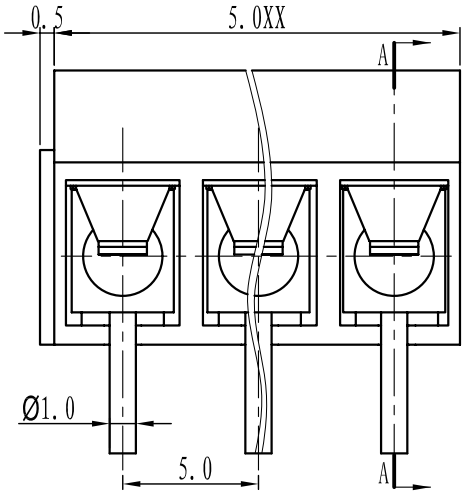

电 气 性 能/Electrical

参考标准/Standard:	UL	IEC
额定电压/Rated voltage:	250V	250V
额定电流/Rated current:	16A	17.5A

接触电阻/Contact resinstance: 20mΩ

使用线径/Wire range: 22-14AWG 1.5mm²

耐电压/Withstanding voltage: AC2000V/1Min

绝缘电阻/Insulation resistance: 500MΩ/DC500V

机 械 性 能/Mechanical

温度范围/Temp.Range: -40° C~+120° C

扭 矩/Torque: 0.4Nm(3.5lb`in)

剥线长度/Strip length: 4.5-5mm

尺 寸/Dimensions

间 距/Pitch: 5.0mm

极 数/Poles: 2P-24P

材 质 及 电 镀/Material

塑 件/Housing: PBT,UL94V-0

螺 丝/Screws: M2.5,steel Zinc plated

方 针/Pin header: Brass,Snce plated

弹 片/Shrapnel: Phosphor bronze,Ni plated

订 购 方 式：
HOW TO ORDER

□□ - □ □ P - □□□ - x x x 客户需求 Custmor Request

型号/Model

极数/POLE

0.未定义/No definition
1.单间距/Sing pitch
2.双倍间/Double pitch

灰色/Grey	10
蓝色/Blue	20
黑色/Black	30
绿色/Green	40
橙色/Orange	50
红色/Red	60
透明/Transparent	70
黄色/Yellow	80
白色/White	90

TOLERANCES EXCEPT AS NOTED

	linear dimension(Tolerances Standard GB/T 14486-2008)											≡	—	▱	//	⊥
variable range	to 6	over 6 to 10	over 10 to 18	over 18 to 30	over 30 to 50	over 50 to 80	over 80 to 120	over 120 to 160	over 160 to 200	over 200 to 250	over 250 to	all	to 5	over 5 to 30	over 30 to 120	over 120 to
tolerance	±0.1	±0.14	±0.19	±0.25	±0.32	±0.43	±0.57	±0.72	±0.88	±1.05	±1.25	0.5	0.025	0.06	0.12	0.4

单位/UNITS	mm	尺寸/SIZE	A4	比例/SCALE	比例	第一视角/THIRD ANGLE PROJECTION
慈溪市万捷电子有限公司 CIXI WANJIE ELECTRONIC CO., LTD						名称/NAME: WJ301-XXP-1YY-00A