慈溪市万捷电子有限公司
CIXI WANJIE ELECTRONIC CO., LTD

产品规格书
product specification

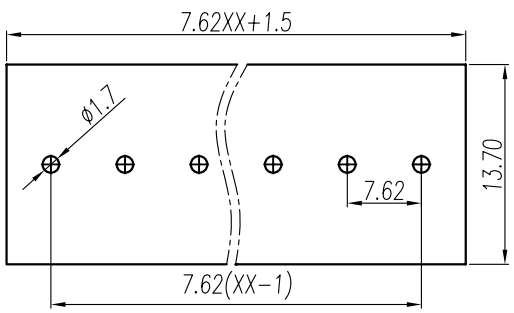

P.C.B. LAYOUT

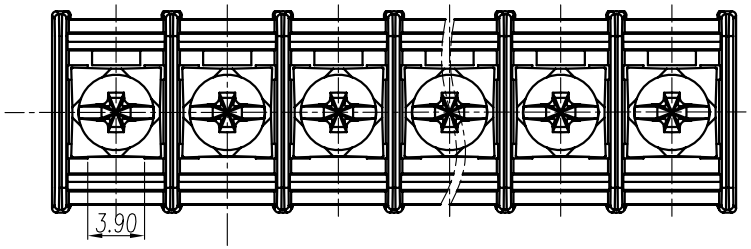

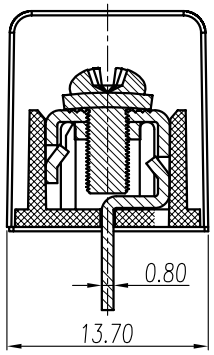

SECTION A-A

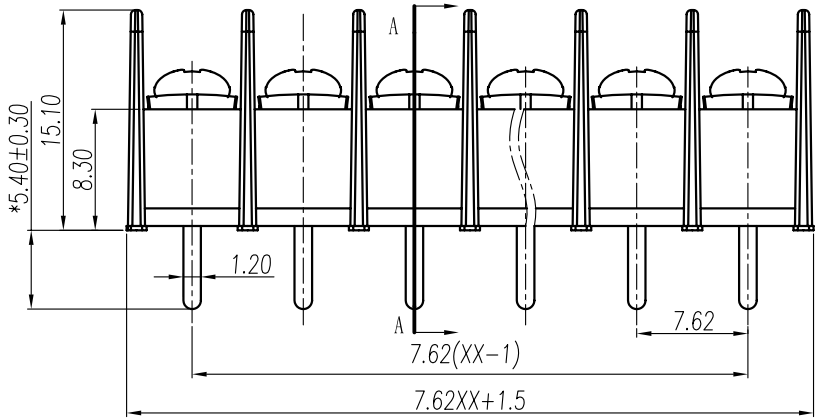

电 气 性 能/Electrical

参考标准/Standard: UL IEC
额定电压/Rated voltage: 300V 450V
额定电流/Rated current: 15A 17.5A
使用线径/Wire range: 22-14AWG 1.5mm^2
耐电压/Withstanding voltage: AC2000V/1Min
绝缘电阻/Insulation resistance: 500MΩ/DC500V

机 械 性 能/Mechanical

扭 矩/Torque: 0.5Nm(4.5lb.in)
温度范围/Temp.Range: -40°C~+105°C

尺 寸/Dimensions

间 距/Pitch: 7.62mm
极 数/Poles: 2p-26p

材 质 及 电 镀/Material

塑 件/Housing: PA66，UL94V-0
螺 丝/Screws: M3，steel，Ni Plated
焊 脚/Pin header: Brass,Tin plated

订 购 方 式：
HOW TO ORDER

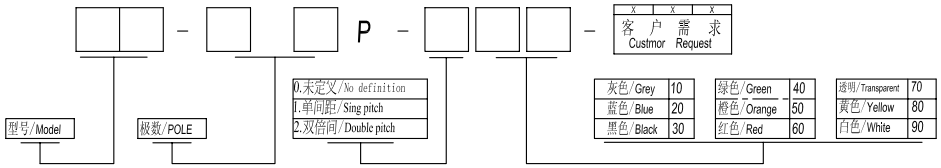

	linear dimension(Tolerances Standard GB/T 14486-2008)																
variable range	to 6	over 6 to 10	over 10 to 18	over 18 to 30	over 30 to 50	over 50 to 80	over 80 to 120	over 120 to 160	over 160 to 200	over 200 to 250	over 250 to	all	to 5	over 5 to 30	over 30 to 120	over 120 to
tolerance	±0.1	±0.14	±0.19	±0.25	±0.32	±0.43	±0.57	±0.72	±0.88	±1.05	±1.25	0.5	0.025	0.06	0.12	0.4

单位/UNITS	mm	尺寸/SIZE	A4	比例/SCALE	比例	第一视角/FIRST ANGLE PROJECTION
慈溪市万捷电子有限公司 CIXI WANJIE ELECTRONIC CO., LTD						名称/NAME WJ25C-XXP-1YY-00A