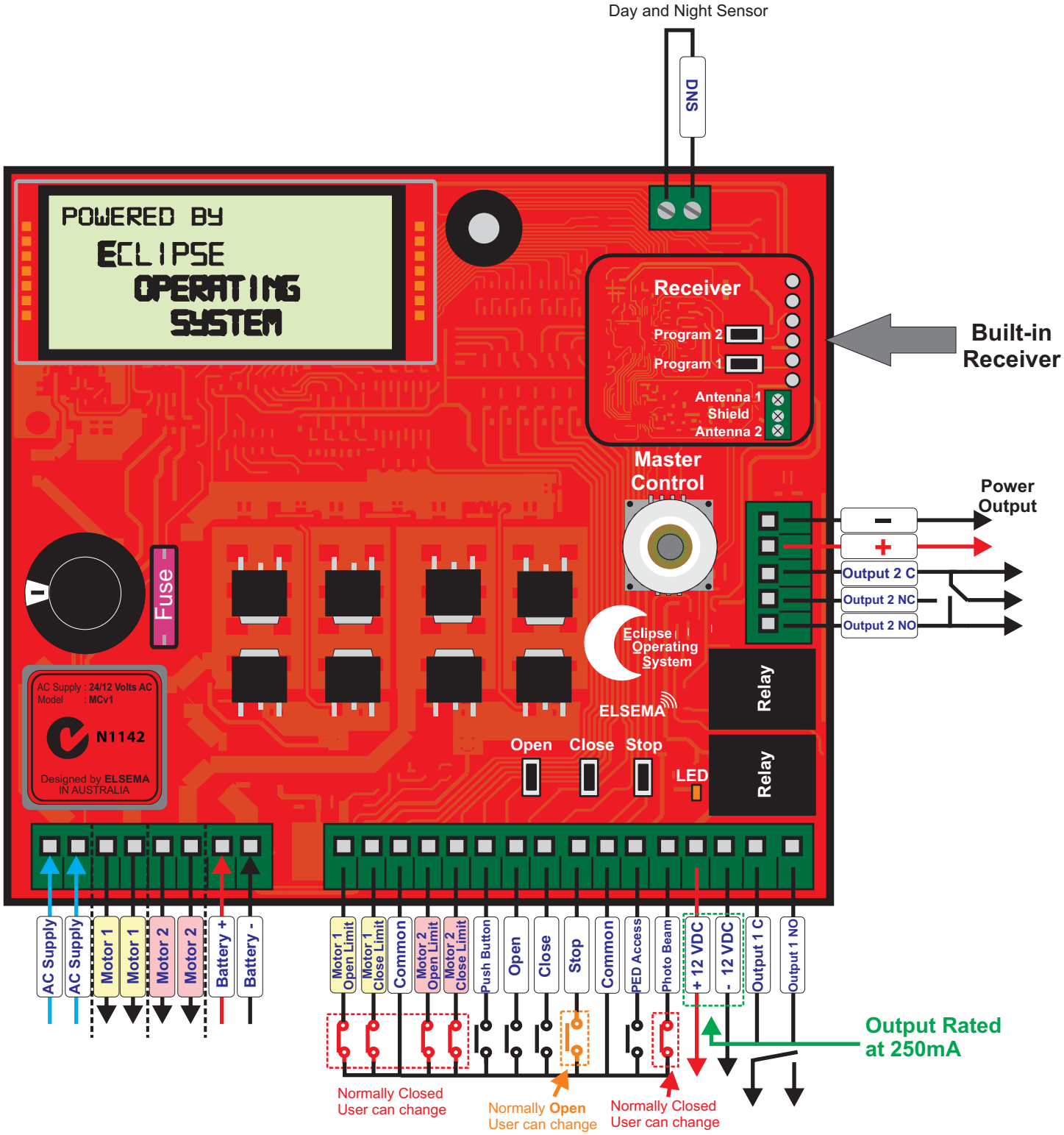
Day and Night Sensor
DNS
POWERED BY
ECLIPSE
OPERATING
SYSTEM
Receiver
Program 2
Program 1
Antenna 1
Shield
Antenna 2
Built-in
Receiver
Master
Control
Power
Output
-
+
Output 2 C
Output 2 NC
Output 2 NO
Fuse
Eclipse
Operating
System
ELSEMA
Relay
Relay
Open
Close
Stop
LED
AC Supply : 24/12 Volts AC
Model : MCv1
N1142
Designed by ELSEMA
IN AUSTRALIA
AC Supply
AC Supply
Motor 1
Motor 1
Motor 2
Motor 2
Battery +
Battery -
Motor 1 Open Limit
Motor 1 Close Limit
Common
Motor 2 Open Limit
Motor 2 Close Limit
Push Button
Open
Close
Stop
Common
PED Access
Photo Beam
+ 12 VDC
- 12 VDC
Output 1 C
Output 1 NO
Output Rated
at 250mA
Normally Closed
User can change
Normally Open
User can change
Normally Closed
User can change