REV	DESCRIPTION	DATE	BY
A	NEW DRAWING	08/12/04	H.N.

SKT2050

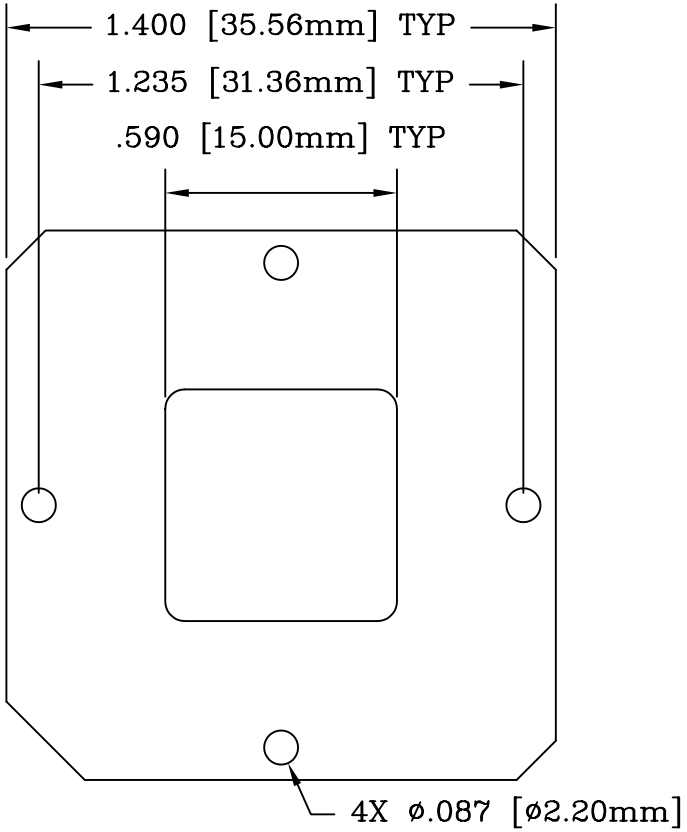

RETENTION FRAME

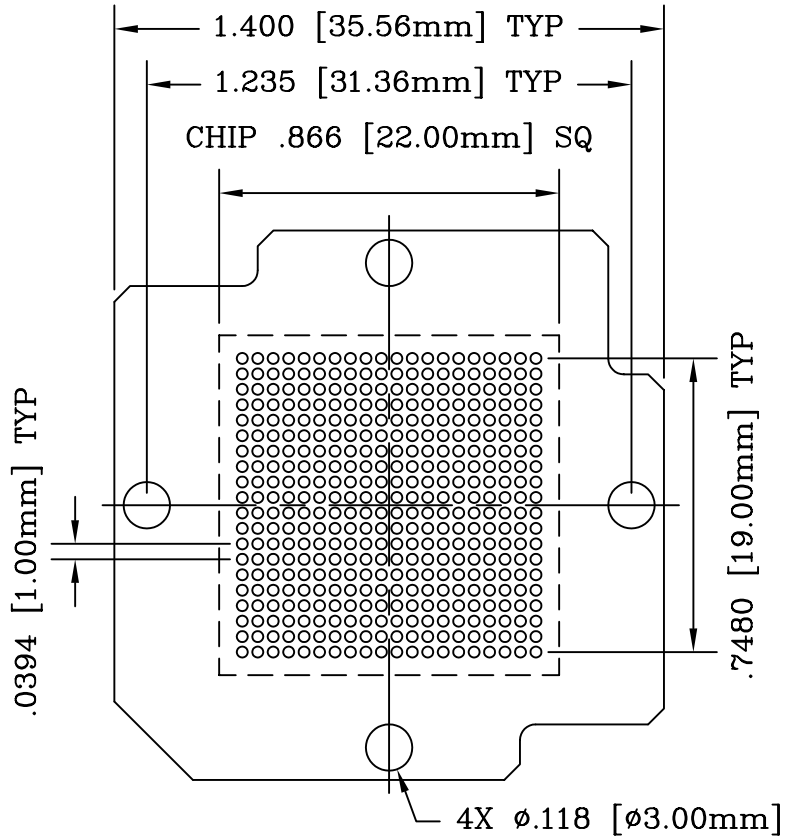

SOCKET

RECOMMENDED PAD LAYOUT

SOLDERTAIL STYLE		
REGULAR SMT STYLE	RAISED SMT STYLE	SPECIAL RAISED SMT STYLE
XX = (-SM)	XX = (-SR)	XX = (-SC)
YY = (-30)	YY = (-29)	YY = (-28)

SOLDERTAIL = THRU HOLE STYLE
XX = (-ET)
YY = (-70)

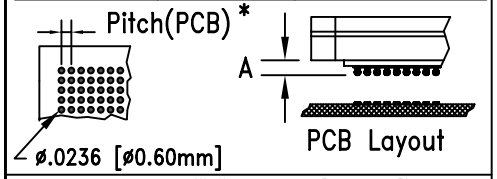

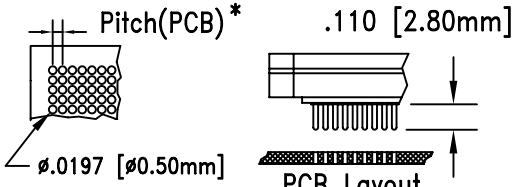

30= standard SMT ("A" = .0315 [0.80mm])
29= raised SMT ("A" = .126 [3.20mm])
28= Special raised SMT ("A" = .177 [4.50mm])

BALL DIAMETER FOR:
-30(SM) = .0197 [0.50mm] TO .0276 [0.70mm]
-29(SR) = .0197 [0.50mm] TO .0276 [0.70mm]
-28(SC) = .0197 [0.50mm] TO .0276 [0.70mm]

PIN DIAMETER FOR:
-70(ET) = .0114 [0.29mm]

* All Dimmensions Are Nominal For A .0394 [1.00mm] Pitch BGA Package

PACKAGE SPECIFICATIONS	
PIN COUNT	= 400
LEAD PITCH	= 1.00mm
GRID SIZE	= 20X20
PACKAGE SIZE	= 22.00mm

ALL DIMENSIONS ARE IN INCHES UNLESS OTHERWISE SPECIFIED

Emulation Technology, Inc.
VLSI and SMT ADAPTERS and ACCESSORIES
2344 Walsh Avenue, Bldg.F
Santa Clara, Ca 95051
TEL:(408)982-0660
FAX:(408)982-0664

SHEET:	DATE:	REVISION:	
1 OF 1	08/12/04	A	ASSEMBLY DRAWING

CHECKED:	DRAWN:	ITEM:
Perry Munroe	Huy Nguyen	S-MBG-20-400-XX

Scale 2:1	DO NOT SCALE DRAWING	DESCRIPTION:
		BPW-400-3BG020-YY