Esterline
Engineered Materials

28065 Franklin Parkway / Valencia, CA 91355-4117 / ph 661-775-1100 / fax 661-775-1155

Bulletin 1200-2: Flip-Loc ® Flush Mount Hinged FAA TSO-C171

Mounting Bracket Separable

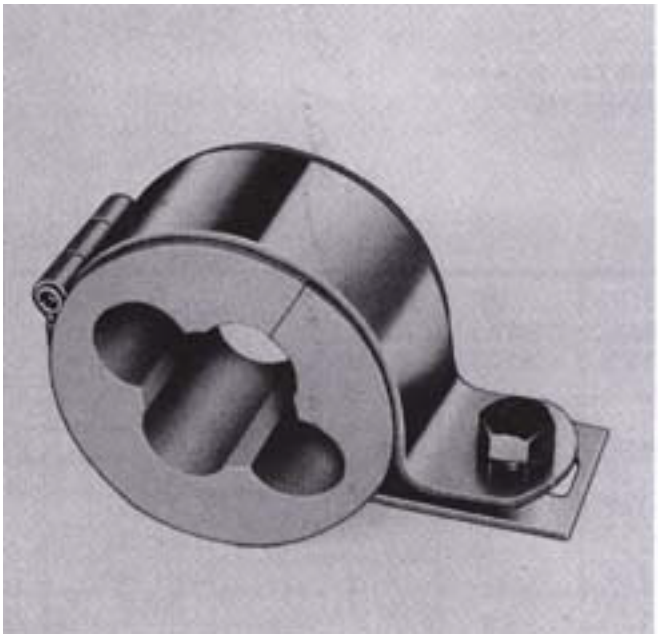

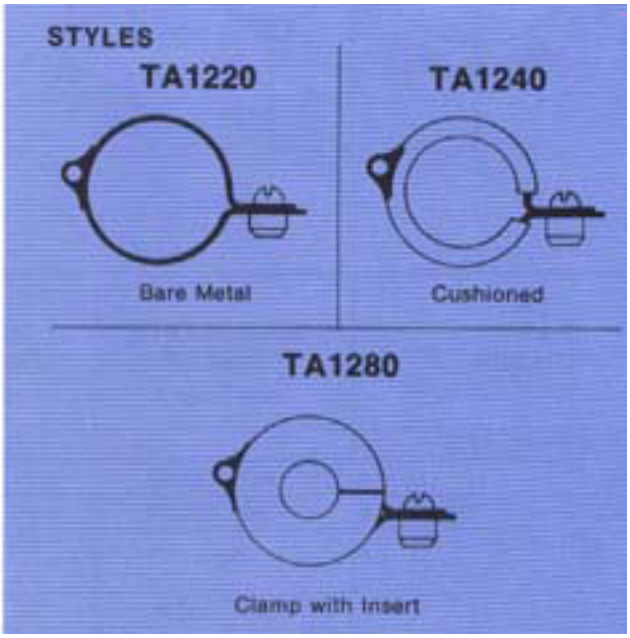

Part Numbering System

ex: TA12400420NB02 = Flip-Loc clamp (.050 stainless steel x 1/2 wide) with 2-hole mounting bracket, Nitrile Butadiene (NB cushion and, thumb screw (1/4 turn lock), for tube size 1-1/4 diameter.

Breakdown:
Part number shown below is separated for clarity. When ordering, do not show spaces.

TA1240 04 20 NB 02

TA1230	=	Basic Part Number
04	=	Design Detail (See Below)
20	=	D Tube Diameter in 1/16" Increments (Show as a minimum of 2 digits)
NB	=	Cushion or Insert Material Code (See Bulletins 120 and 130)
02	=	Screw Head Option (See Bulletin 1000A)

Esterline
Engineered Materials

28065 Franklin Parkway / Valencia, CA 91355-4117 / ph 661-775-1100 / fax 661-775-1155

Specifications

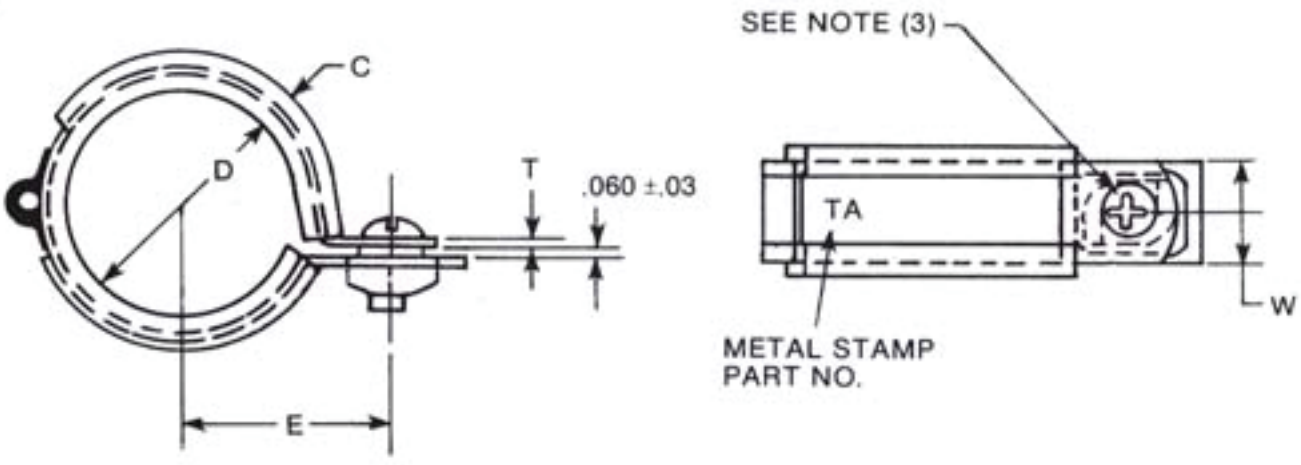

Diagram ID ▸	Applicable Insert See Note 1	Nominal Diameter expressed in 1/16" increments	Strap Width	Metal Gauge	Mounting Dimension	
		D	W	T	E	C
Tolerances ▸			+/- .005	Per Spec.	+/- .015	Ref.
Part Number						
TA12 80 01 ( )( )( )( )	TA71100003	01 thru 05	1/2"	.040	.726	N/A
TA12 80 02 ( )( )( )( )	TA71100004	01 thru 07	1/2"	.040	.788	.210
TA12 ( ) 03 ( )( )( )( )	N/A	08 thru 16	1/2"	.040	D/2 + .538	N/A
TA12 ( ) 04 ( )( )( )( )	17 thru 64	1/2"	.050	D/2 + .548	.210	
TA12 80 05 ( )( )( )( )	TA71100011	02 thru 11	5/8"	.050	1.018	N/A
TA12 ( ) 06 ( )( )( )( )	N/A	12 thru 64	5/8"	.050	D/2 + .640	.210
TA12 80 07 ( )( )( )( )	TA71100012	02 thru 11	3/4"	.050	1.018	N/A
TA12 ( ) 08 ( )( )( )( )	N/A	12 thru 64	3/4"	.050	D/2 + .640	.210
TA12 80 09 ( )( )( )( )	TA71100013	02 thru 11	1"	.050	1.018	N/A
TA12 ( ) 10 ( )( )( )( )	N/A	12 thru 64	1"	.050	D/2 + .640	.210

Material: Band and bracket: 321 stainless steel, annealed, per AMS 5510
Finish: Ball burnished and passivated per QQ-P-35
Note 1: Synthetic rubber inserts are required and supplied when specifying style TA1280 for nominal diameters within the limits shown. Applicable insert part numbers are shown for reference only. See Bulletins 120 and 130 for insert configurations and materials available. "N/A" shown in this column indicates that standard cushion configurations and materials will be supplied as applicable for styles TA1240.
Note 2: Plastic inserts are an available option. Contact TA Product Engineering Dept.
Note 3: Screw size (not optional) per strap width, 10-32 screws are used on 1/2 wide strap clamps, 1/4-28 screws are used on larger wid ths.
Note 4: See Bulletin 1000A for separable bracket options. Order separately.

This document is the property of Kirkhill-TA and is conveyed with the express condition that it and the information contained in it are not to be used, disclosed or reproduced in whole or in part, for any purpose without the express written consent of Kirkhill-TA and that no right is granted to disclose or so use any information contained in said document. These restrictions do not apply to vendor proprietary parts.