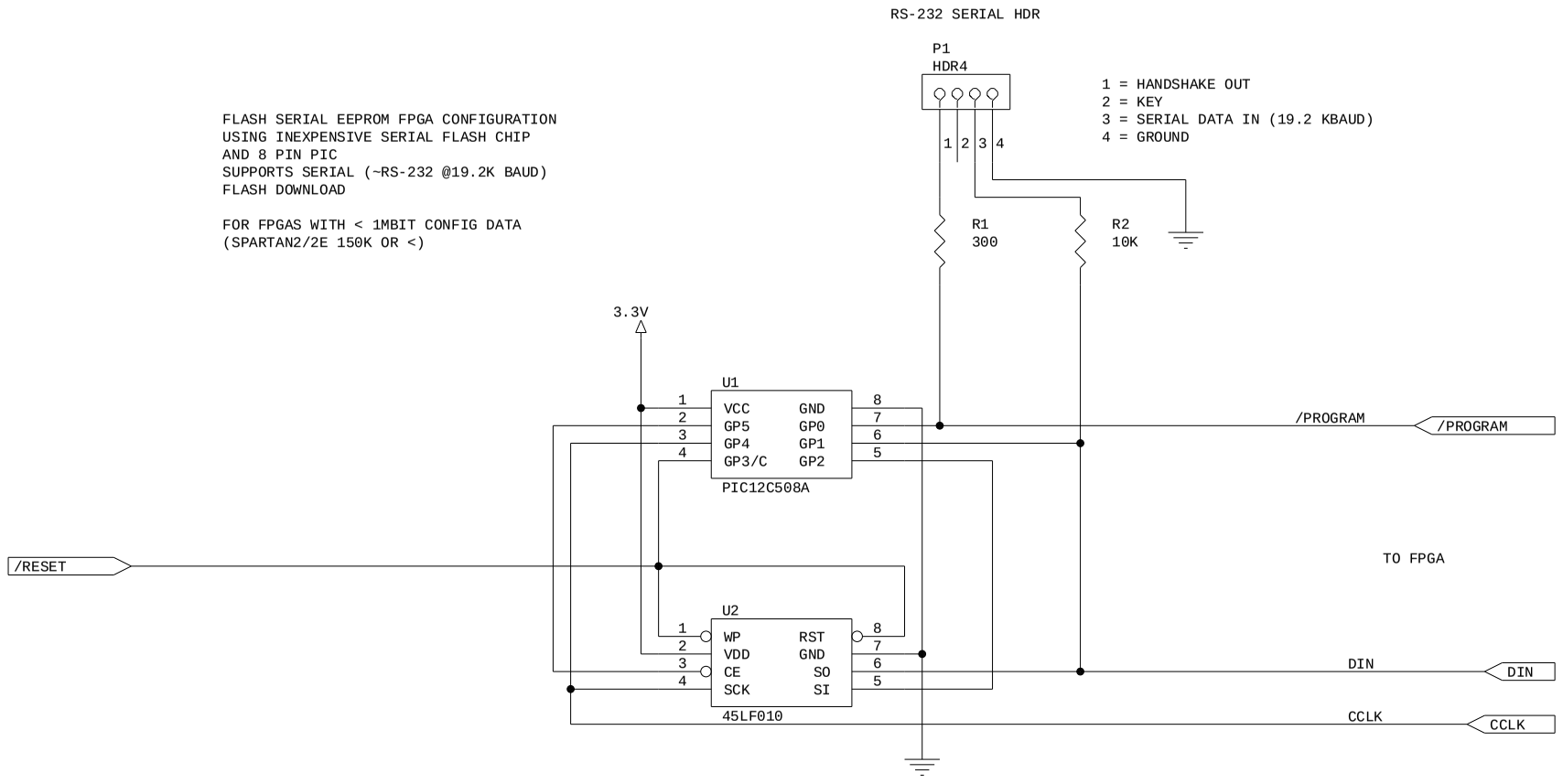

Size	Document Number	REV
A		
Date: February 18, 2003	Sheet of	