NOSE ASSEMBLY DATA SHEET

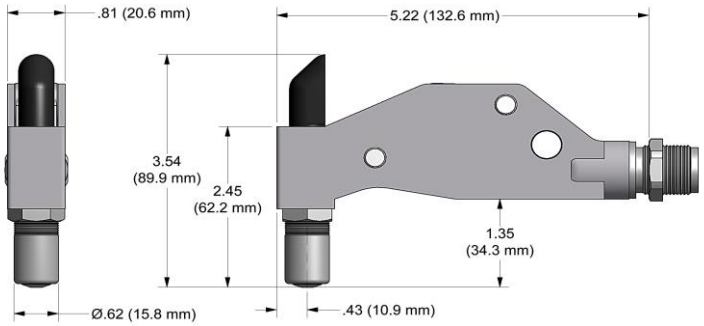

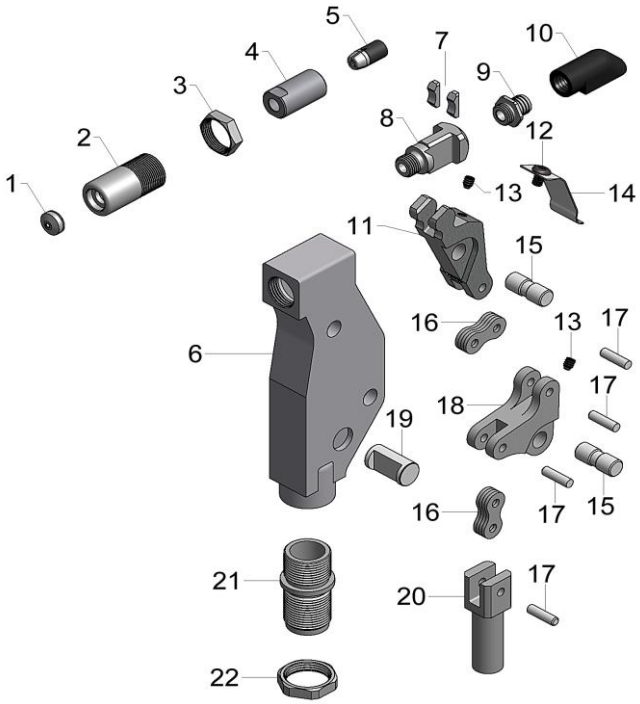

CAUTION!
Do not operate if pintail deflector is removed. Pintail may eject forcibly. SEVERE PERSONAL INJURY MAY RESULT.

*RECOMMENDED FOR MAINTENANCE APPLICATIONS ONLY.
**RIGHT ANGLE NOSE ASSEMBLIES REQUIRE MORE THAN ONE "PULL"

4/15

GAGE BILT

GAGE BILT Inc.
44766 Centre Court (586) 226-1500
Clinton Twp. MI 48038 (586) 226-1505 Fax
e-mail:solutions@gagebilt.com / www.gagebilt.com

Type:	Fasteners:	Recommended Tool:
Single Action 3/32" Ø	NAS1398A/1399A RV 1000/1100 & 1200	GB704

Ref. No.	Qty.	Description	**3A-704-54RA**
1	1	Anvil-Driving	13001
2	1	Anvil Holder	10115
3	1	Jam Nut	70411
4	1	Collet	20327
5	1	Super-Grip Jaw Assy	30314-S8
6	1	Frame	75310
7	2	Shoe Bearing	75311
8	1	Drawbolt Collet	70486
9	1	Barbed Retainer	70575
10	1	Deflector	61107
11	1	Lever	75313
12	1	Button Head Cap Screw	402471
13	2	Set Screw	75315
14	1	Guard	75316
15	2	Pivot Pin	75317
16	8	Link	75318
17	4	Link Pin	75319
18	1	Bellcrank	75320
19	1	Guide Pin	75321
20	1	Drawbolt	75322
21	1	Adapter Fitting	75323
22	1	Jam Nut	70104

ATTACHMENT:
Disconnect air supply from tool. Hold back of drawbolt-collet (8) down with thumb. Thread anvil holder (2) into frame (6) until it bottoms out on collet (4). Loosen approximately 1/4 turn and tighten jam nut (3) securely to frame (6). Engage one or two threads of drawbolt (20) onto piston assy located on tool, then insert adapter fitting (21) into end of head cylinder assy located on tool and turn clockwise until snug. Rotate nose assembly to desired position and tighten jam nut (22) securely. Reconnect air supply to tool.

DISASSEMBLY:
Loosen jam nut (3) and remove anvil holder (2). Unscrew collet (4) which contains super grip jaw assy (5) from drawbolt-collet (8).

Remove button head cap screw (12) and guard (14). Remove two set screws (13) and push out two pivot pins (15) to permit removal of linkage. Shoe bearings (7) and drawbolt-collet (8) will disengage from lever (11).

Remove four link pins (17) to disassemble lever (11), links (16), bellcrank (18) and drawbolt (20).

Remove guide pin (19) from frame (6). Adapter Fitting (21) is secured to frame with Loctite® and need not be removed unless damaged.

REASSEMBLY:
Reverse the procedure. Linkage, consisting of lever (11), links (16), bellcrank (18) and drawbolt (20) should be assembled as a subassembly before inserting lever (11) into shoe bearings (7) and drawbolt-collet (8). MAKE SURE NOTCHES ON DRAWBOLT-COLLET (8) ARE POINTING TOWARDS LEVER (11). This complete subassembly may then be inserted into frame (6) and retained by guide pin (19) and pivot pins (15).

LOCTITE® IS A REGISTERED TRADEMARK OF HENKEL CORPORATION.