FIXED FILTER BANK/ BANC FIXE FILTRE

_____ KVARS, _____ VOLTS

NEMA:__ | Kg/Lbs: 100/220

DIM: 1030 X 690 X 425mm (41"x 27"x 17")

PLAN VIEW, WITHOUT COVER
VUE DE PLAN SANS COUVERCLE

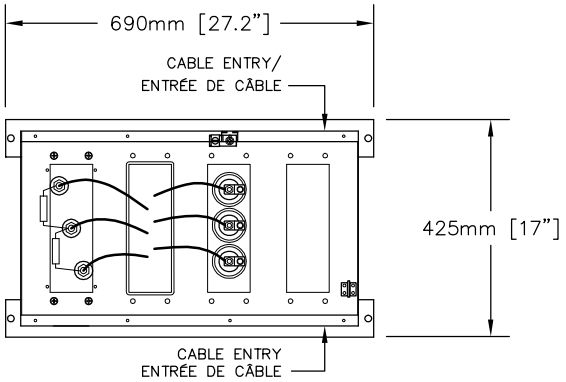

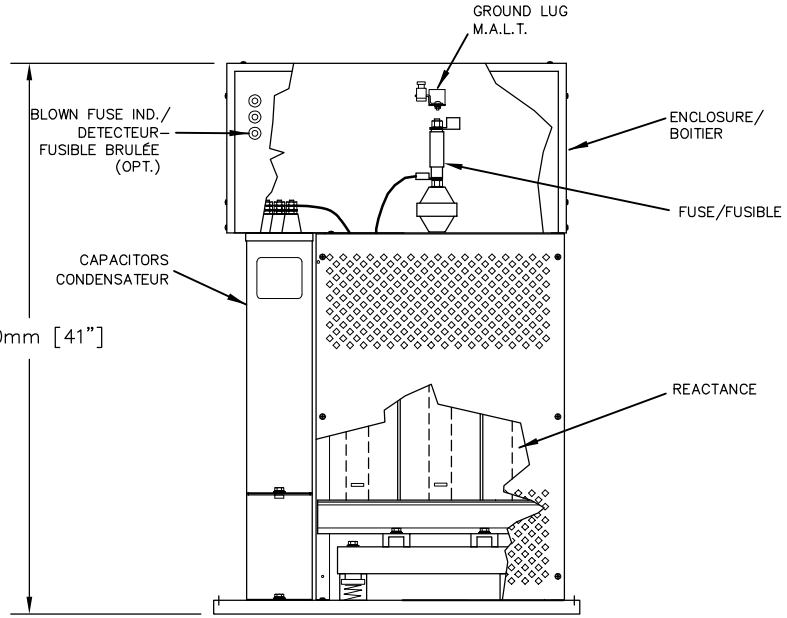

ELEVATION VIEW
VUE ÉLEVATION

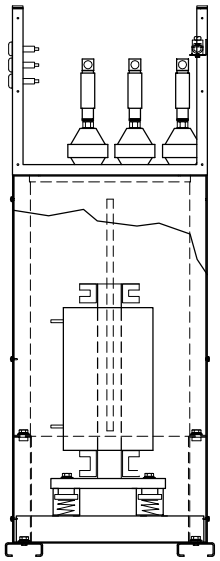

SIDE VIEW/
VUE CÔTÉ

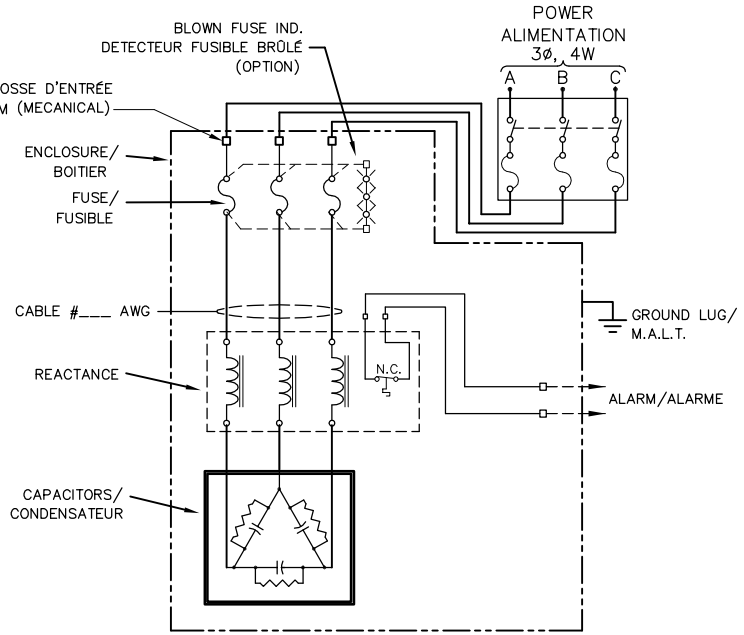

CLIENT/CUSTOMER
COM/P.O.#
DOSSIER/FILE

☐ INFORMATION
☐ APPROBATION APPROVAL
☐ PRELIMINAIRE PRELIMINARY
☐ SOUMISSION QUOTATION
☐ AUTRE OTHER

REF.	REVISION	DATE	⊢	√

TOLERANCE
DEC. t ±
FRAC. t ±
ANGLE T ±
√

√	
√	
⊢ M Simard	
DATE 2014/01/11	
----	

gentec

DS100 & DS200
SINGLE FIXED CAPACITOR WITH FILTER
GENERAL PRESENTATION

SK-6290A | A4