GENTEC INDUSTRIAL LOW VOLTAGE CAPACITORS

3 PHASE CAPACITOR SPECIFICATION

- **TYPE** DRY SELF-HEALING CAPACITOR DESIGN
- **RATED VOLTAGE** 600V. 60 Hz
- **OVER VOLTAGE** 1.375 U_N CONTINUOUS
  1.43 U_N 30 MIN/DAY
- **OVER CURRENT** 1.50 U_N CONTINUOUS
- **STANDARD** CSA, UL, IEC, VDE AND BS
- **INSULATION CLASS** 3 KV RMS / 15 KV PEAK
- **LOSSES** LESS THAN 0.4 WATT / KVAR
- **OPERATING AMBIENT TEMPERATURE** -40°C / +40°C (-40°F / +104°F)
- **MAXIMUM AMBIENT TEMPERATURE** +50°C (+122°F)
- **DIELECTRIC METALLIZED POLYPROPYLENE FILM**
- **THIS *INTERNALLY FUSED* CAPACITOR IS SUPPLIED WITH EXTERNAL DISCHARGE RESISTORS AND TERMINAL BOX.**
- **CELL LIFE: 20 YEAR (200,000 HOUR) DESIGN**

HEAVY DUTY
750 VOLTS
CONSTRUCTION

NEW COOL DESIGN
SPECIAL HIGH EFFICIENCY
HEAT TRANSFERT PACKAGE

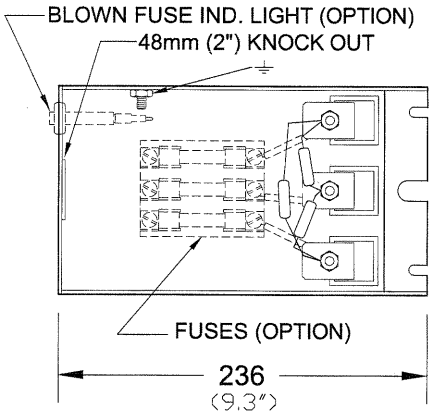

JUNCTION BOX VIEW

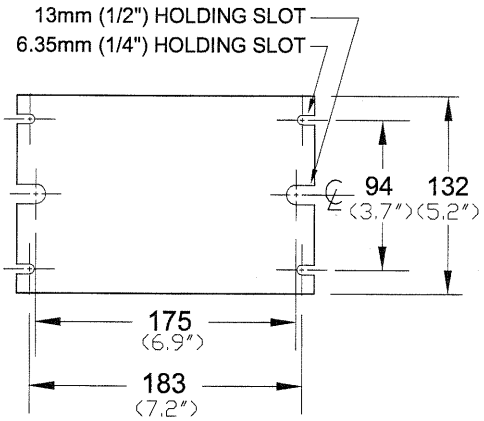

BASE MOUNTING VIEW

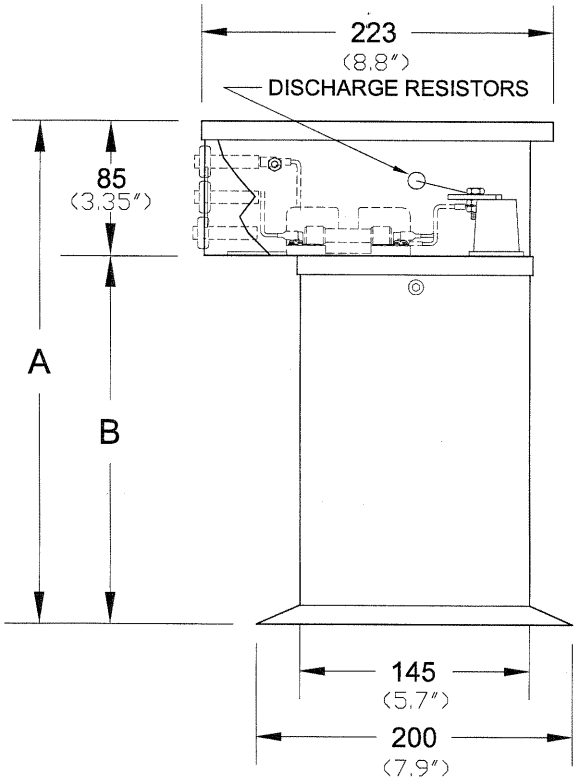

CABLE CONNECTION TERMINALS (M8 / 5/16" BOLT)

"SPECIAL APPLICATION DESIGN" 3 PHASE CAPACITORS 600V 60Hz							
KVAR	PART # DSHI-_____	WEIGHT		DIMENSIONS A		DIMENSIONS B	
		KG	LBS	MM	INCHES	MM	INCHES
3	31248-ML1Y-_*_	6.5	14.5	230	9.1	145	5.7
6	31249-ML1Y-_*_	6.5	14.5	230	9.1	145	5.7
7.5	31250-ML1Y-_*_	6.5	14.5	230	9.1	145	5.7
10	31251-FL1Y-_*_	6.5	14.5	230	9.1	145	5.7
12.5	31252-FL1Y-_*_	7.5	16.5	330	13.0	245	9.6
15	31253-FL1Y-_*_	7.5	16.5	330	13.0	245	9.6
20	31254-SL1Y-_*_	7.5	16.5	425	16.7	340	13.4
25	31256-SL1Y-_*_	7.5	16.5	425	16.7	340	13.4

*SEE OPTION

PART NUMBER

DSHI-31256-SL1Y-1-F-BFI

Dry Self Healing Individual
GENTEC #
DIMENSIONS

L1: 1 TOWER STYLE
L2: 2 TOWER STYLE

*CHECK OPTION: ☑

BFI: Blown Fuse Indicator ☐

F: Fused (EXTERNAL)
F: 3 FUSES ☐ 2F: 2 FUSES ☐

1: INDOOR USE (STANDARD)
12: DUSTPROOF ☐
3R: OUTDOOR USE ☐

D: DELTA
Y: STAR

ISO 9001 CERTIFICATION	CONSTRUCTION STANDARD UL-CSA	gentec WITH NOKIAN CAPACITOR	SK-6349 L1 08/03/27