Intermountain Electronics

Electronic and Electro-Mechanical Components

INTERMOUNTAIN ELECTRONICS, INC.

www.intermountainelectronics.com

(435) 637-7160



Intermountain Electronics, Inc.

For over 25 years, Intermountain Electronics has innovated, engineered, produced, and serviced world-class electrical distribution and control equipment for a wide variety of applications. IE is an industry pioneer and leader, boasting best-in-class expertise, and a stellar reputation across a range of industries including mining, oil and gas, tunneling, power generation/distribution, and municipal/government.

Businesses from these and other industries rely on Intermountain Electronics to provide quality products and exceptional service. The industry experts at Intermountain pride themselves on exceeding the needs and expectations of our customers.

As a long-time provider of products and services ranging from large scale one-off custom power systems to standard off-the-shelf electronic/electro-mechanical components, Intermountain Electronics understands the stringent environmental conditions, operating requirements, and government regulations that our customers must contend with.

Every Intermountain Electronics product is carefully designed, manufactured, and tested to ensure world-class performance and reliability.

Please visit our website:
www.intermountainelectronics.com/IE-Components.aspx
for the most recent version of this catalog.


Mining | Oil & Gas | Tunneling | Power Generation
Utilities | Government | Municipalities

Contents:

1……..I Ground Monitors

7……..II Ground Fault Relays

13……..III Voltage Monitors

15……IV Capacitor Trip Devices

21……V Circuit Breakers

25……VI Transformers

29……VII Plugs & Receptacles

35……VIII Accessories, Cable Assemblies, Cable

45……IX IE Services and Distribution

Price, Utah | Denver, Colorado | South Point, Ohio | Centralia, Illinois
Hermosillo Mexico | Washington, Pennsylvania

INTERMOUNTAIN ELECTRONICS, INC.

(435) 637-7160


PATENT PENDING
GLT-500
Ground-Lock Technology
TRIPPED
POLARITY
CONTINUITY
TEST
GREEN: OK
RED: TRIP


GMS-504DZ
DIGITAL GROUND FAULT RELAY
CURRENT
DIGITAL GROUND MONITOR
GM TEST
GM RESET
PATENT PENDING


HVGM-1
HV Ground Monitor
UVP
NON-UVP
NORMAL
TRIPPED
CONTROL B
CONTROL A
TEST
POLARITY

The GLT-500 Family of Continuity Ground Monitors

The GLT-500 ground monitors are state-of-the-art, fail-safe, continuity Ground Monitors (GMs) for use with system voltages up to 5kV. These ruggedly built GMs feature **Ground Lock Technology™**, a patented technology to monitor ground currents with greatly improved accuracy and reliability.

The GLT-500 GMs are **approved by MSHA** for LV/MV mining applications, and, unlike most ground monitors in use today, meet all current MSHA testing standards (CFR 30 Parts 75, 77, MSHA documents ASTP 2135 and ACRI 2003).

The GLT-500 family includes four models to suit a wide variety of applications. The GLT-500 and GLT-AT500 are full-chassis, panel-mount designs, while the GLT-500-1 and GLT-AT500-1 are open-frame units intended to be rear mounted.

GWD/PWD: A typical installation includes the GM, a high-voltage Pilot Wire Device (PWD), a suitable Ground Wire Device (GWD) and a current transformer (CT).

The 1020-0051 PWD has been specially designed for all GLT-500 monitors, and is included with each GM.

GLT-500 and GLT-500-1 require "anti-parallel diode" GWDs, which normally have an integrated Current Transformer (CT). GLT-AT500 and GLT-AT500-1 are calibrated for "coil" GWDs, which require separate CTs. Refer to the table below for details:

GWD Selection

Model	Recommended GWD / CT MSHA approval not required	Recommended GWD / CT MSHA approval required
GLT-500 GLT-500-1	1100-6020 GWD with Integrated CT	Contact IE for recommendations
GLT-AT500 GLT-AT500-1	CT: IE PN 2000-0308 GWD: IE PN 1100-6010	CT: IE PN 2000-0308 GWD: Contact IE for recommendations

Accessory Port: Each GLT GM includes an accessory port for Intermountain Electronics expansion modules which can dramatically increase interconnectivity and signal monitoring capabilities.

GLT-500/GLT-AT500

GLT-500-1/GLT-AT500-1

Features

- Ground Lock Technology™ for improved ground monitoring and dramatically improved reliability
- Rugged mechanical construction, full chassis version sealed from the elements
- MSHA Approved for LV/MV operation
- Fail-safe design
- Modern, reliable electronic design
- Accessory port for enhanced connectivity/expandability
- Easy upgrade: GLT-500/GLT-AT500 are reverse compatible with older Ground Monitors
- Available in full-chassis and open-frame versions

Specifications

- Required GWD/CT (not included): See table above
- PWD (included): IE Part #: 1020-0051
- Control voltage: 120 VAC/60 Hz, 25 VA NOM
- Impedance trip level: <50 Ω (45 Ω NOM)
- System voltage: Up to 5 kV

US Pat. Numbers: 9,124,089, 9,172,234, 9,197,055

INTERMOUNTAIN ELECTRONICS, INC.

Typical GLT Ground Monitor Installation

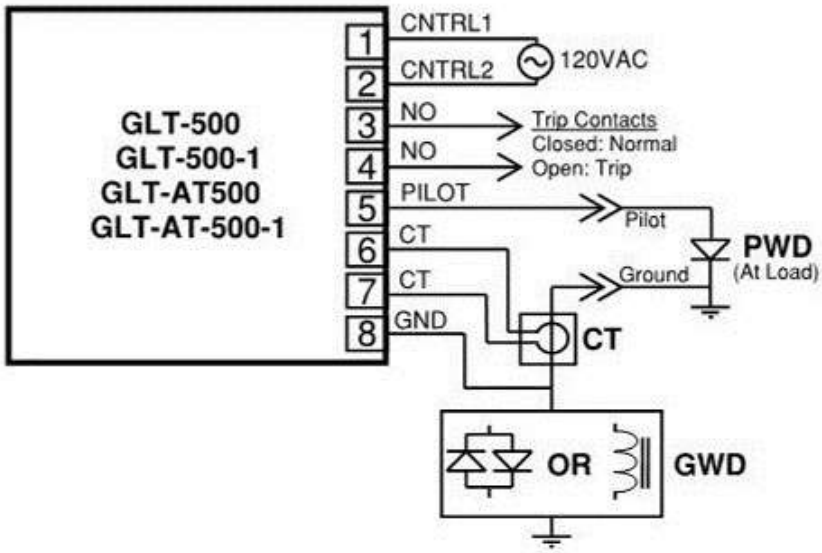

GLT-500/GLT-500-1 Ground Monitor Accessories

1100-6010 Coil-Type Ground Wire Device (GWD): A coil-type GWD for use with the GLT-AT500 and the GLT-AT500-1 in applications that do not require MSHA approved GWDs. Coil-type GWDs are preferred in some applications, and provide excellent arc suppression. This type of GWD does not include an integrated CT, so the 2000-0308 CT must also be purchased separately.

2000-0308 CT: A compact 450:0.1 Current Transformer required when GLT monitors (GLT-AT500 and GLT-AT500-1) are used with coil GWDs such as the 1100-6010, which do not have integrated CTs.

1100-6020 Diode-Type Ground Wire Device (GWD): A high-current, anti-parallel diode-type GWD with an integrated Current Transformer (CT). This GWD is used with the GLT-500 and GLT-500-1 for applications that do not require MSHA approved GWDs.

1100-1900 Drawout Assembly: The GLT-500 Drawout Assembly dramatically reduces the downtime associated with replacing a GLT-500/GLT-AT500 ground monitor. With this drawout enclosure, the ground monitor can be replaced very quickly, without opening the power center. Drawout Assemblies (1100-1901, 1100-1902) are similar to 1100-1900, but are designed for use with GLT-500s equipped with expansion modules.

1020-0051 PWD: Pilot Wire Device for use with continuity ground monitors at system voltages <5 kV. This PWD is the best choice for the GLT-500/GLT-500-1/GLT-AT500/GLT-AT500-1 monitors, and it is included with those products.

A2315-001 PWD: The A2315-001 Pilot Wire Device (PWD) is a low to medium voltage (<1000V) pilot wire terminating device for use with continuity ground monitors.

1020-0078 Fanning Strip: Simplifies installation and removal of the GLT-500/GLT-500-1 ground monitors. Includes PCB fanning strip and 2 wire-ties. Wires shown are not included.

Expansion Modules and other accessories: See the accessory section of this catalog for more details. GLT ground monitors are available with these modules pre-installed. Contact IE for details.

Expansion Modules

1100-7100

1100-7110

US Pat. Numbers: 9,124,089, 9,172,234, 9,197,055

GLT-500/GLT-AT500/GLT-500-1/GLT-AT500-1 Ground Monitor Ordering Information

Model	Part #	Description
GLT-500	1100-1000	GLT-500 Ground Monitor with 1020-0051 PWD (Requires GWD)
GLT-500 Combo	1100-1007	GLT-500 Ground Monitor with 1020-0051 PWD, 1100-6020 GWD
GLT-500 MSHA Combo	1100-1008	GLT-500 Ground Monitor with 1020-0051 PWD, MSHA Approved GWD
GLT-500-1	1100-1002	GLT-500-1 Ground Monitor with 1020-0051 PWD (Requires GWD)
GLT-AT500	1100-1020	GLT-AT500 Ground Monitor with 1020-0051(Requires GWD)
GLT-AT500 Combo	1100-1027	GLT-AT500 Ground Monitor with 1020-0051 PWD, 1100-6010 GWD, 2000-0308 CT
GLT-AT500 MSHA Combo	1100-1028	GLT-AT500 Ground Monitor with 1020-0051 PWD, MSHA Approved GWD, 2000-0308 CT
GLT-AT500-1	1100-1022	GLT-AT500-1 Ground Monitor with 1020-0051 (Requires GWD)

Compatible Ground Monitor Accessories

Part #	Description
1100-1900	Drawout Assembly for GLT-500. Includes required GLT-500 Adapter Fanning Strip
1100-1901	Drawout Assembly, Same as 1100-1900, plus hardware for use with a 1100-7100 expansion module
1100-1902	Drawout Assembly, Same as 1100-1900, plus hardware for use with a 1100-7110 expansion module
1100-1903	Replacement Circuit Board Assembly required for use with 1100-7100 Expansion Module
1100-1904	Replacement Circuit Board Assembly required for use with 1100-7110 Expansion Module
1100-1905	Replacement GLT-500 Adapter Fanning Strip, used to adapt GLT-500 for use with Drawout Assembly
1100-1906	Replacement Connector Assembly, required for use with 1100-7100 or 1100-7110 Expansion Modules
1100-6010	Ground Wire Device (GWD) for GLT-AT500/GLT-AT500-1, coil-type GWD (2000-0308 CT Required)
1100-6020	Ground Wire Device (GWD) for GLT-500/GLT-100-1, anti-parallel diodes w/ integrated CT
1100-7100	Expansion module with D-Sub and barrier strip (see accessories section of this catalog)
1100-7110	Expansion module with dual barrier strips (see accessories section of this catalog)
1020-0051	High-voltage Pilot Wire Device (included with GLT-500/GLT-500-1) for use up to 5kV
1020-0078	Fanning Strip (8-pins) for simple installation/removal of GLT-500 / GLT-500-1
2000-0308	450:0.1 Current Transformer (CT) for use with 1100-6010 GWD
A2315-001	Low-voltage/Medium-voltage PWD designed for use at <1kV

GMS-504DZ Ground Monitoring System

The GMS-504DZ with **4DZ Technology™** is a state-of-the-art ground monitoring system that combines a patent-pending, digital Ground Monitor (GM) with a fully programmable digital Ground Fault Relay (GFR), all in a single compact package.

4DZ Technology™ (Patent Pending) provides the most sophisticated, best performing Ground Monitor system available. Benefits include:

- Best available resistance to nuisance tripping, or, worse, failures to trip.
- 4DZ digital test signal and detector prevent problems due to interference and surges.
- Digital Signal Processing provides extremely accurate ground monitoring and reliable performance.

Features and Specifications

Overall System

- Cutting-edge design, using Digital Signal Processing (DSP).
- On-board diagnostics and redundant key circuits for reliability.
- Fail-safe design ensures the GMS-504DZ trips if power fails, or if any failure is detected.
- Compatible with IE Expansion Modules for added interconnection/ monitoring capabilities.
- Mode selection switches protected under a clear window to prevent accidental changes. These illuminated switches make checking settings simple, even in poor light.
- Designed for power systems operating at up to 5kV.

Ground Monitor

- 4DZ Technology™ for reliable performance, and immunity from interference or turn-on surges.
- No need for the polarity switches needed with other ground monitors.
- Optional Parallel Path Protection Mode prevents parallel paths from masking ground problems.
- Latching or non-latching operation.

Ground Fault Relay

- Fully programmable digital ground fault relay.
- Settable trip current levels: 0.5A, 2A, 3A, 4A, 6A
- Delay time settable from instant to 2 seconds.
- "Normal" GFR mode with DSP harmonic filter to eliminate nuisance trips.
- "VFD mode" for use with Variable Frequency Drives.

Typical Installation

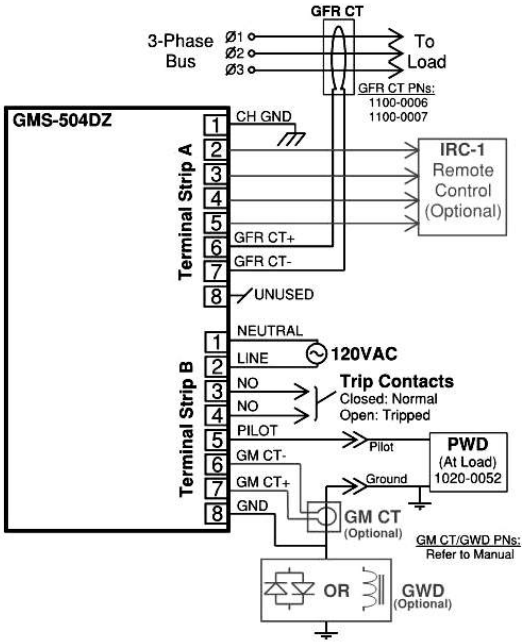

Ordering Information

Model	Part #	Description
GMS-504DZ	1100-1050	GMS-504DZ Ground Monitoring System
IRC-1	1100-4001	IRC-1 Remote Control for GMS-504DZ
1100-0006	1100-0006	Ground Fault Relay CT, 2.5" ID
1100-0007	1100-0007	Ground Fault Relay CT, 4.2" ID
1100-6021	1100-6021	Diode-Type GWD with integrated 2000-1367 CT
Arc Choke	1100-6010	Coil-Type GWD (2000-1367 CT is also required)
2000-1367	2000-1367	GM CT (1100-6010 GWD is also Required)
1100-1920	1100-1920	Rear Mount Adapter for GMS-504DZ (Allows GMS-504DZ to be Rear Mounted, Moves Electrical Connections to Front)

GMS-504DZ Accessories

GM GWDs/CTs

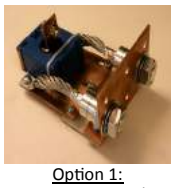

Option 1:
1100-6021 GWD/CT

Option 2:
1100-6010 GWD & 2000-1367 CT

IRC-1 Remote

1100-4001

Expansion Modules

1100-7100

1100-7110

Rear Mount Adapter

1100-1920
(GMS-504DZ not incl'd)

GFR CTs

2.5" ID: 1100-0006
4.2" ID: 1100-0007

HVGM-1 High Voltage Ground Monitor

The HVGM-1 is an impedance-type Ground Monitor (GM) designed to monitor the integrity of the grounding conductor between a power source and equipment being powered.

When properly installed, the HVGM-1 monitors the impedance of the ground conductor, and trips if this impedance increases by more than 3 ohms.

The HVGM-1 is designed for use in power systems in High-Voltage (HV) systems (over 1000V). For LV or MV systems (under 1000V), IE recommends the GLT-500 and GMS-504DZ ground monitors.

Front and Rear Panels

Features and Specifications

- Analog current meter makes calibration simple and intuitive.
- Polarity switch allows optimal setting to prevent nuisance trips.
- Latching circuit-breaker trip indicator indicates when a grounding issue has occurred, even if the problem is intermittent.
- Test button allows test of the GM function.
- UVR mode (selectable via a protected rear-panel switch): The GM will trip if a bad ground is detected <u>or</u> if control voltage is lost. This mode is fail-safe.
- Non-UVR mode (selectable via a protected rear-panel switch): The GM will trip if a bad ground is detected. This mode is <u>not</u> fail-safe.
- Lockout mode (selectable via protected rear panel switch): The GM will stay tripped until the latching circuit breaker trip indicator is manually reset.
- Non-Lockout Mode (selectable via protected rear panel switch): The GM will automatically reset if the ground issue that caused the trip is cleared. However, the latching circuit-breaker trip indicator will continue to indicate that a trip occurred until manually reset.
- Impedance Range Switch (protected on rear panel) allows selection of 16 or 50 ohm impedance ranges. This allows up to 50 ohms of pilot/ground impedance, but improves calibration for more common, lower impedance, systems.
- Full chassis to improve reliability and to improve safety.
- Standard panel mount / pinout makes the HVGM-1 an easy upgrade for legacy products.
- Input Voltage: 120 VAC +/- 15%, 55 VA
- Pilot output: 16 VAC (Nominal, no load), up to 1.5A

1100-1100-MK1

1100-1100-MK1

An HVGM-1 integrated with a mounting kit designed to simplify replacement of certain obsolete ground monitors. Mounting kit makes the HVGM-1 a direct mechanical and electrical replacement, with the same mounting holes and pin-out.

Ordering Information

Model	Part #	Description
HVGM-1	1100-1100	HVGM-1 High Voltage Ground Monitor
HVGM-1 w/ Adapter	1100-1100-MK1	HVGM-1 With Mounting Kit

INTERMOUNTAIN ELECTRONICS, INC.


IGFR-3
GROUND FAULT RELAY
NORMAL
TRIPPED
TEST
MUST BE IN NORMAL POSITION TO CLOSE BREAKER
www.intermountainelectronics.com
IEM
INTERMOUNTAIN ELECTRONICS, INC.

IGFR Ground Fault Relays

Intermountain Electronics is pleased to present the newly-designed IGFR line of Ground Fault Relays (GFRs). Each IGFR has been designed for reliable operation, and to be a major upgrade over other relays that have been used in mining and other industries for many years.

Upgrading an outdated relay with a new IGFR is simple, because the IGFRs have been designed to directly replace common GFRs that have been used extensively in the past. Electrical connections and mechanical mounting are fully compatible, so a replacement can be made in minutes.

The IGFRs are more compact than the legacy GFRs they replace, even though they mount in the same panel cutout.

IGFR-1 Ground Fault Relay

The IGFR-1 Ground Fault Relay (GFR) detects zero-sequence ground fault currents, and it is designed to trip at less than 6 amps, using IE Current Transformers (CTs).

A circuit breaker on the IGFR-1 trips when a ground fault above the threshold is detected. The circuit breaker is used as an indicator, and it also provides NO, NC, and C auxiliary contacts for use with under-voltage or shunt trip breakers.

Once tripped, the circuit breaker remains in the tripped position until manually reset.

The IGFR-1 features a test button to verify proper operation of both the circuit breaker and the current transformer.

Features:

- Circuit Breaker trip indication
- Manual reset
- Test button to verify circuit breaker and CT
- Under-Voltage (UV) and shunt-trip operation
- Modern PCB-based design for durable, reliable operation

Specifications:

- Contacts (NC/NO): 10A/240VAC
- Supply voltage: 120VAC
- Use with Current Transformers (CTs):
  P/N 1100-0001 (2" ID)
  P/N 1100-0002 (3" ID)
- Applicable to other systems with properly designed CTs
- For use in systems with ground currents limited to 25A (when using IE CTs above)
- Trips at under 6A

Compatible Products:

- 1100-0001 CT (2" ID)

- 1100-0002 CT (3" ID)

- 1020-0076 Fanning Strip
  (See Accessories Section)

Connection Diagram:

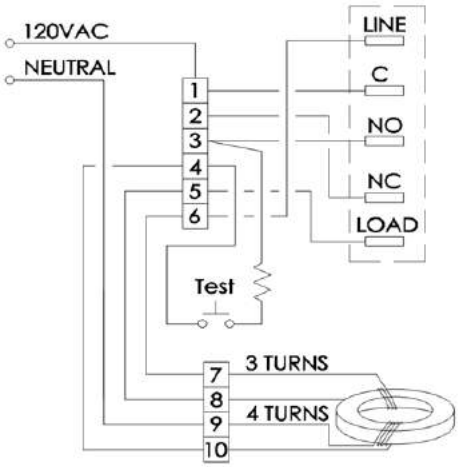

Panel Cutout:

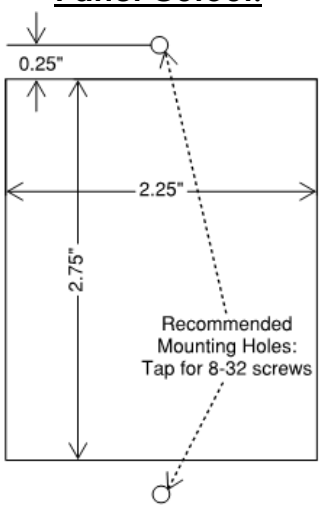

IGFR-1 Ordering Information

Model	Part #	Description
IGFR-1	1100-0101	IGFR-1 Ground Fault Relay with Test Button, Manual Reset (CT Required)
IGFR-1 w/ 2" CT	1100-0201	IGFR-1 Ground Fault Relay with 1100-0001 2" CT
IGFR-1 w/ 3" CT	1100-0202	IGFR-1 Ground Fault Relay with 1100-0002 3" CT
		Accessories:
	1100-0001	CT, Ground Fault with 2" ID
	1100-0002	CT, Ground Fault with 3" ID
	1020-0076	Fanning Strip, 6 Pos, .375" Pitch

IGFR-2 Adjustable Ground Fault Relay

The IGFR-2 Ground Fault Relay (GFR) detects zero-sequence ground fault currents through a Current Transformer (CT), and its relay trips when these currents exceed a settable limit between 3.3A and 15A. Once tripped, the IGFR-2 remains latched until it is manually reset,

The IGFR-2 can be set for Normally Open (NO) or Normally Closed (NC) operation, for use with undervoltage or shunt trip breakers.

A green PWR LED is lit when the IGFR-2 is on. The red TRIP LED lights when a trip occurs, and remains lit until the GFR is reset.

The IGFR-2 is designed to be used with the 1100-0006 CT. When used with this CT, the IGFR-2/CT is suitable for use in resistance grounded 3 -phase power circuits that are NGR-limited to no more than 25A. Other properly designed CTs may be used with the IGFR-2 to allow operation in other types of circuits.

Features:

- Power (Green) and Trip (Red) LED Indicators
- Manual reset
- Adjustable trip current setting (factory calibrated to 5A)
- NO or NC operation (factory set for NC)
- Modern PCB-based design for durable, reliable operation

Panel Cutout:

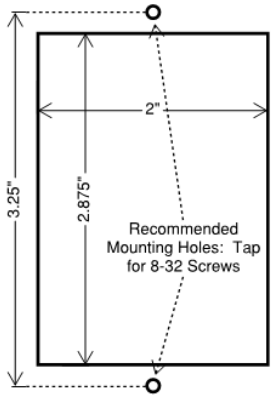

Specifications:

- Contacts (NC/NO): 3A/240VAC, 5A/28VDC
- Adjustable trip current level: 4A-15A, +/-1A (factory set to 5A)
- Power supply: 120VAC
- Use with Current Transformer (CT): 1100-0006
- Applicable to other types of systems with properly designed CTs
- For use in systems with ground currents limited to 25A maximum (when using 1100-0006 CT)

Connection Diagram:

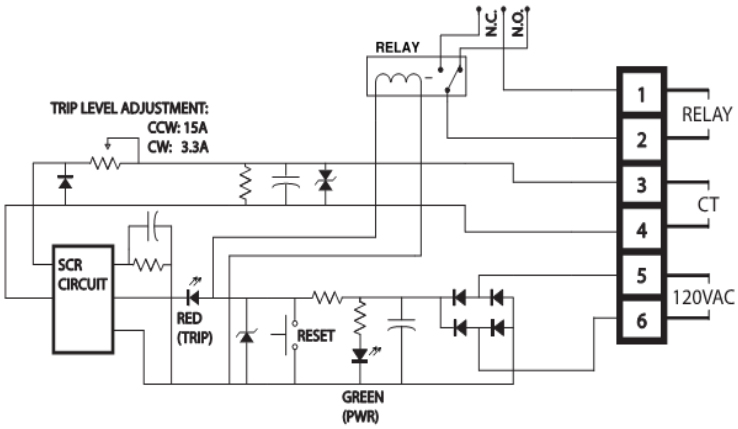

Compatible Products:

- 1100-0006 CT (350:5, 2.5" ID)
- 1100-0007 CT (350:5, 4.25" ID)
- 1020-0076 Fanning Strip (See Accessories Section)

1100-0006 (2.5"ID)

1100-0007 (4.25"ID)

IGFR-2 Ordering Information

Model	Part #	Description
IGFR-2	1100-0102	IGFR-2 Ground Fault Relay with Adjustable Trip Current (CT required)
IGFR-2 w/ 2.5" CT	1100-0203	IGFR-2 Ground Fault Relay with 1100-0006 2.5" CT
IGFR-2 w/ 4.25" CT	1100-0204	IGFR-2 Ground Fault Relay with 1100-0007 4.25" CT
		Accessories:
	1100-0006	CT, Ground Fault, 350:5, 2.5" ID
	1100-0007	CT, Ground Fault, 350:5, 4.25" ID
	1020-0076	Fanning Strip, 6 Pos, 0.375" Pitch

IGFR-3 Ground Fault Relay

The IGFR-3 Ground Fault Relay (GFR) detects zero-sequence ground fault currents, and is designed to trip at less than 5 amps, using a compatible Current Transformer (CT).

The circuit breaker on the IGFR-3 trips when a ground fault is detected. Once tripped, the circuit breaker remains in the tripped position until manually reset.

The IGFR-3 features a test button to verify proper operation of both the circuit breaker and the current transformer.

Specifications:

- Contacts (NC, NO): 10A/240VAC
- Input voltage: 120VAC
- Use with current transformers:
  95-0060, 95-0060-01, 95-0061,
  95-0061-01, 96-0069 (or equiv.)
- For use in systems with ground currents limited to 25A maximum (when using CTs above)
- Applicable to other types of systems with properly designed CTs
- Modern PCB-based design for durable, reliable operation

Features:

- Circuit breaker trip indication
- Manual reset
- Test button to verify circuit breaker & current transformer operation
- Under-Voltage (UV) and shunt-trip operation
- Trips at under 5A

Panel Cutout:

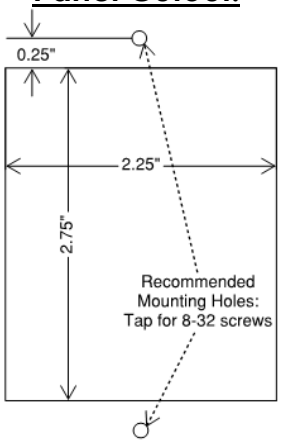

Compatible Products:

- 1020-0075 Fanning Strips (uses 2), see accessories section
- 1100-0016 CT w/ 2" ID
- 1100-0017 CT w/ 2" ID w/ Mounting Bracket
- 1100-0018 CT w/ 3" ID

1100-0016
(2"ID)

1100-0018
(3"ID)

1100-0017
(2"ID)

Connection Diagram:

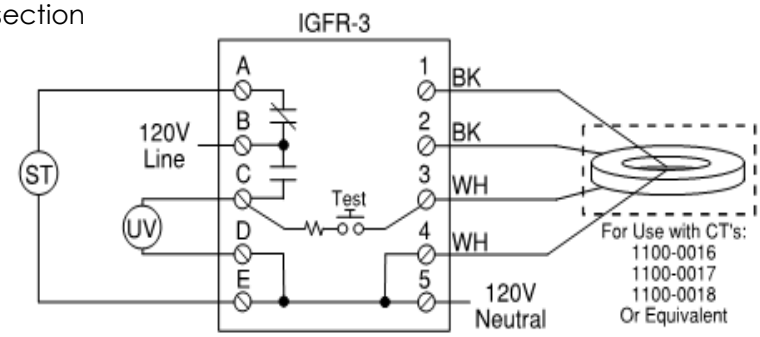

IGFR-3 Ordering Information

Model	Part #	Description
IGFR-3	1100-0103	IGFR-3 Ground Fault Relay with Test Button, Manual Reset (CT Required)
IGFR-3 Combo Kit	1100-0205	IGFR-3 with 1100-0016 CT
		Accessories:
	1100-0016	CT w/ 2" ID
	1100-0017	CT w/ 2" ID w/ Mounting Bracket
	1100-0018	CT w/ 3" ID
	1020-0075	Fanning Strip, 5 Pos, .375" Pitch

IGFR-4, IGFR-5 Ground Fault Relays w/Time Delay

The IGFR-4 and IGFR-5 Ground Fault Relays (GFR) detect ground fault currents by monitoring the voltage across a Neutral Grounding Resistor (NGR). The relay trips when a phase-neutral fault occurs, causing fault currents to flow through the NGR.

The IGFR-4 is designed to be connected directly across the NGR, and is used for 480V and 600V systems (1000V with the addition of two external resistors).

The IGFR-5 is designed to connect across an NGR through a step-down potential transformer (PT), which has a primary rated at the system line-neutral voltage, and a 120 VAC secondary. The PT is not included.

Both GFRs feature adjustable time-delay settings.

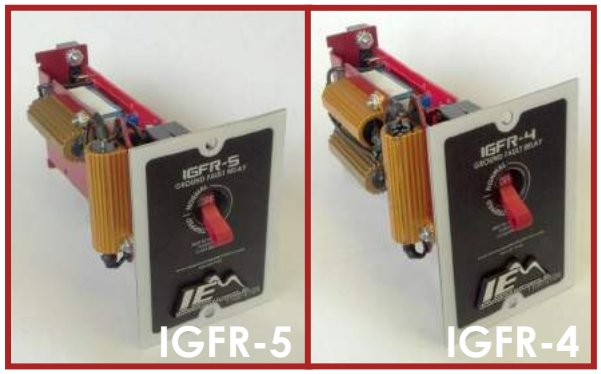

Features:

- 0-5 second adjustable trip delay time. Multi-turn potentiometer for accurate delay settings
- Circuit breaker trip indication
- Manual reset
- NO/NC outputs for under-voltage or shunt breakers
- Compact design

Panel Cutout:

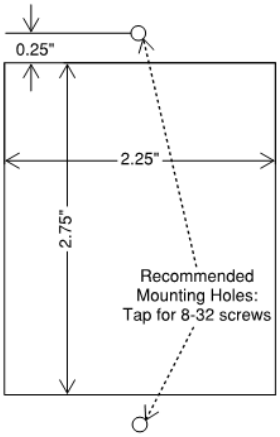

Specifications:

- Trip contacts (NC/NO): 10A/240 VAC
- Trip delay: 0-5 Seconds (factory set: 0.25 Sec)

IGFR-4:

- Designed for 480V-600V (L-L) systems with limited ground currents (25A max). May be used in 1 kV systems with added external resistors
- Trips at approximately 115V across NGR

IGFR-5:

- Designed for system voltages of 1000V or more
- Requires a separate PT:
  - Primary: Rated for system L-N voltage
  - Secondary: 120 VAC
- Trips at approximately 70 V at PT secondary

Connection Diagram:

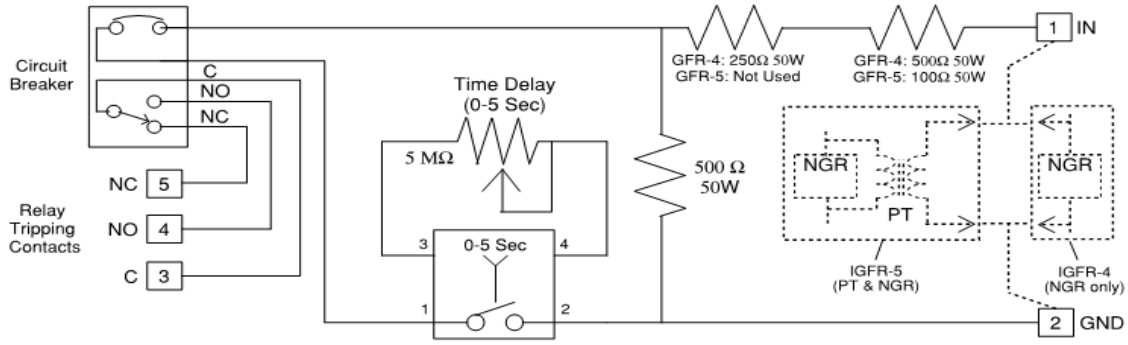

PT Notes (IGFR-5 only):
1. PT primary must be rated for phase-neutral voltage.
2. PT secondary must be 120 VAC

IGFR-4, IGFR-5 Ordering Information

Model	Part #	Description
IGFR-4	1100-0104	IGFR-4 Potential Ground Fault Relay with Adjustable Time Delay
IGFR-5	1100-0105	IGFR-5 HV Potential Ground Fault Relay with Adj. Time Delay (PT required)
		Accessories:
	1020-0075	Fanning Strip, 5 Pos, .375" Pitch

Voltage Monitors

Intermountain Electronics proudly presents an innovative new line-up of voltage monitoring products designed to improve the safety in switchgear and industrial power distribution systems.

Each of these products is very simple to install. All are self-powered, and few electrical connections are required. Operation is even simpler—there is no calibration to do, and there are no controls to operate.

The different models support a wide range of voltages and installation requirements.

LLI-1 Live Line Indicator

LLI-1 is a simple, inexpensive 3-phase voltage monitor. Lamps for each phase on the front panel flash when voltages are present. The flash rate increases with higher voltages and vice versa.

Electrical connections are provided for each bus and ground. The LL-1 is powered from the bus being monitored, so no additional connections are needed.

Features:

- Inexpensive, simple way to add "voltage present" monitor to a 3-phase bus
- Simple to install and use—no controls or calibration required
- Small size: Requires only 3.25" x 3.5" panel space
- Monitoring range: 120VAC Ø-GND to 600VAC Ø-GND (Ideal for systems up to 1000kV Ø-Ø)

Suggested Panel Cutout:

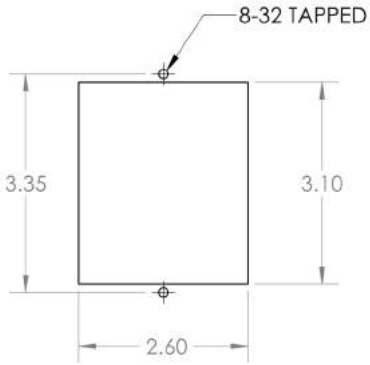

Voltage Monitor Ordering Information

Model	Part #	Description
LLI-1	1100-9570	LLI-1, Live Line Indicator, 200V-1000V Ø-Ø, 120V-600V Ø-GND
IHV-1	1100-9500	IHV-1 HV Monitor, 4kV-17kV Ø-Ø/2.3kV-10kV Ø-GND
IHV-2-1	1100-9550	IHV-2 HV Monitor, 2kV-15kV Ø-GND (Use 1100-9550-3 for a 3-pack)
IHV-2-2	1100-9551	IHV-2 HV Monitor, 15kV-40kV Ø-GND (Use 1100-9551-3 for a 3-pack)

IHV-1 3-Phase High Voltage Monitor (Patent Pending)

The IHV-1 is a high-voltage monitor that indicates when high voltages are present in 3-phase power systems. Indicators on the IHV-1 front panel flash, and audible "blips" are produced when high voltages are present. The frequency of the flashes and blips is a useful indication of the voltage level.

No electrical connections to the phases are required to monitor voltages with the IHV-1. Instead, patent-pending sensor pads sense phase voltages *through the insulation* on each phase cable (cables must not be shielded). These self-adhering, "one-size-fits-all" sensor pads are easy to install, and can be used for all commonly used cable sizes.

Features and Specifications

- Independent indicator lamps for each phase, lamps flash to indicate presence of high voltage
- Redundant audible alarms "blip" when high voltages are present
- Frequency of lamp flashes and alarms increase with higher voltages, and vice versa
- Independently monitors phase-to-ground voltage of each phase
- Patent-pending sensor pads attach securely to the insulator of each phase cable without gaps that can result in corona damage
- Sensor pad sizes may be optimized for specific cables and voltages being monitored—simple trimming instructions printed on each pad make optimization simple
- ***No direct electrical connections to the phases.***
- Sensor pads recommended for all cable sizes with outside diameters greater than 0.2"
- Self-powered—***No power supply needed.***
- Fully isolated panel-mounted indicator unit
- Simple operation: No calibration, no operator controls
- Monitoring range: 4kV-17kV Ø-Ø/2.3kV-10kV Ø-GND

Sensor Pads

Before Installation

Installed:

Connection Diagram

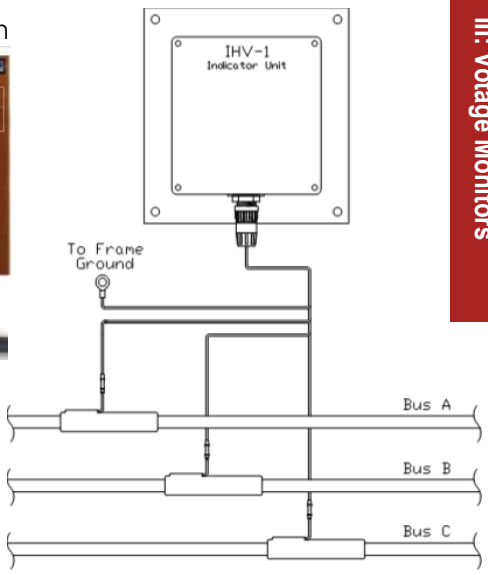

IHV-2 Single Phase High Voltage Monitor

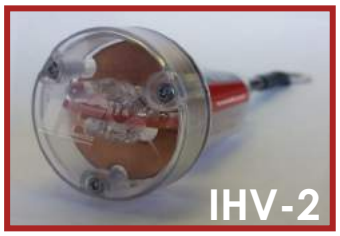

The IHV-2 indicates when high voltages are present on a conductor, such as a voltage bus. To operate, the IHV-2 needs only to be attached with a single bolt to the conductor—no other connections are needed.

Indicators, visible through the clear housing of the IHV-2, flash when high voltages are present, and the frequency of the flashes is an indication of the voltage level.

Installation Example:

Features and Specifications

- Indicator lamps indicate presence of high voltage
- Five front indicators, plus rear indicators provide nearly 360° visibility
- Frequency of flashes increases with higher voltages, and vice versa
- Semi-rigid "positioning lead" allows the unit to be easily positioned to optimize viewing angle
- ***No electrical/mechanical connections required, except for a single mounting bolt***
- Easy to use: No controls, no connectors, no calibration
- Wirelessly ***self-powered—No power supply or batteries needed***
- Two models available to cover a wide voltage monitoring range
- Compact, rugged design
- Two voltage ranges available: 2kV-15kV Ø-GND and 15kV-40kV Ø-GND

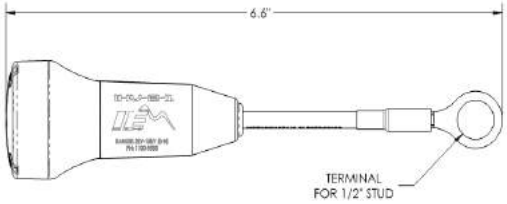

INTERMOUNTAIN ELECTRONICS, INC.


ICTD-103CP
with
Contact Protect Technology™
DISCHARGE
POWER
ERROR
TEST
TEST
READY
UVR
READY
OPEN
COIL CKT
PATENT PENDING

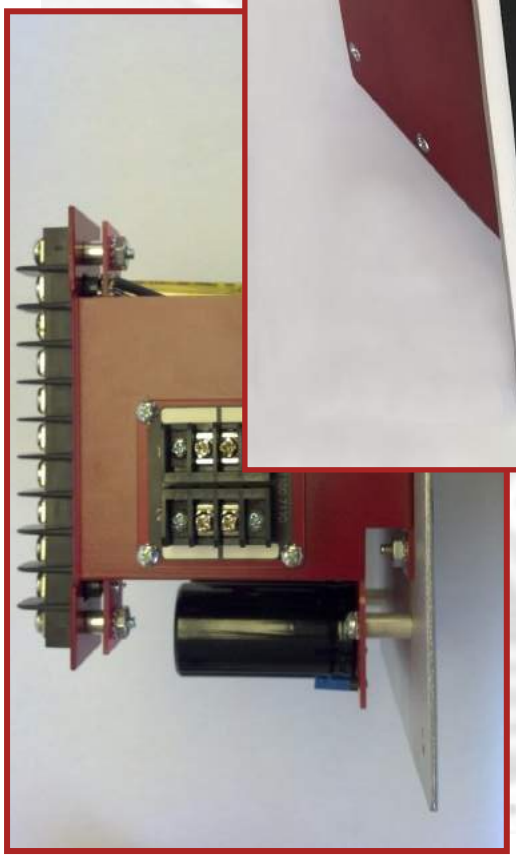

Capacitor Trip Devices

Intermountain Electronics is proud to introduce the newly designed ICTD Series of Capacitor Trip Devices (CTDs). These panel-mounted CTDs are designed to withstand the rugged environments of mining and other industrial power systems.

A CTD is an energy reservoir designed to provide current that may be needed to energize a shunt circuit to open a breaker in the event of a temporary loss of control power.

The newest additions to the IE CTD family are the ICTD-10xCP models. These microprocessor-based models feature several new innovations to improve performance and safety over more traditional designs.

The ICTD-1 also includes UVR functionality to prevent a breaker from being closed before the capacitors are charged.

The new ICTDs feature increased storage capacity (6000uF), modern PCB-based circuits and compact size. Each ICTD model also includes an expansion module (1100-7110) to provide remote monitoring/control capabilities not available with other CTDs.

Both ICTD models are designed to be reverse-compatible with legacy CTDs that have been in common usage for years. Upgrading is simple, because mechanical mounting and electrical interconnection are compatible, even though the ICTD models are more compact and offer additional features.

In addition to the ICTD family, IE also produces the 518432 Cap Trip Device. This product is primarily offered as a replacement for legacy products. For new designs, the ICTD family is recommended.

ICTD-10xCP Capacitor Trip Devices

The patent-pending ICTD-10xCP family of Capacitor Trip Devices (CTDs) are the most advanced products of their kind. Every model is microprocessor based and each features several revolutionary innovations, including **Contact Protect Technology™**. These innovations improve performance, reliability and safety, setting the ICTD-10xCP CTDs apart from other similar products.

Features:

- Contact Protect Technology™ eliminates the common problem of arcing damage to auxiliary (AUX) switch contacts.
- Easy-to-read, three color level indicator allows instant verification of the capacitor reservoir charge level.
- Unique DISCHARGE button allows the reservoir to be quickly discharged for safety--no need to "arc" the trip circuit to do maintenance.
- Large 5000uF (66 joules) capacitor bank.
- Open Coil Circuit indicator verifies when a trip circuit is in place. Specially designed sensing circuitry detects both traditional trip coils and modern trip circuits.
- Open Circuit Test button (ICTD-101CP, -103CP) allows open coil circuit to be tested.
- UVR interlock function (ICTD-102CP, -103CP) with Test button improves safety by preventing the circuit breaker from being closed until the capacitor reservoir is charged.
- Microprocessor and exclusive "watchdog" circuitry constantly monitor operation to ensure reliability and safety.
- Expansion module port allows the addition of exclusive IE expansion modules for extra connectivity options, such as external monitoring, control and diagnostics.
- Fully enclosed chassis to improve reliability and product life-time.

Specifications:

- Input voltage: 120 VAC
- Charge Time: < 1 Second
- Storage Capacity: 5000uF/66 Joules
- Typ. storage time: 40 S (varies w/ different breakers)
- Output voltage (fully charged): 160-170V (Chopped DC)
- Req. Trip Contact rating: 10A/240VAC (Resistive)
- UVR Relay Contact rating: 8A/250VAC (Resistive)
- Error Jumper:
  - Position 1: Breaker trips if error detected.
  - Position 2 (Fact. Default): No trip on error
- Weight: 3 lbs / 1.3 kg

Contact Protect Technology™ (Patent Pending)

In a typical circuit breaker installation, the breaker is tripped by energizing its trip circuit using energy stored in a CTD. As soon as the breaker is tripped, a breaker auxiliary contact is used to disconnect the CTD to prevent damage caused by continuously powering the breaker's trip circuit.

Unfortunately, auxiliary contacts in most breakers are only AC rated, and traditional CTDs only provide DC current. As a result, auxiliary contacts are commonly damaged, and this damage often extends to the breaker's trip circuit.

Contact Protect Technology™ eliminates this problem by converting the DC energy stored in the CTD to an alternating current before delivering it to the trip circuit.

ICTD-10xCP Product Family

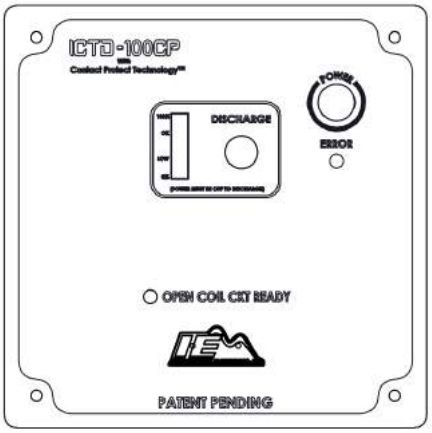

ICTD-100CP

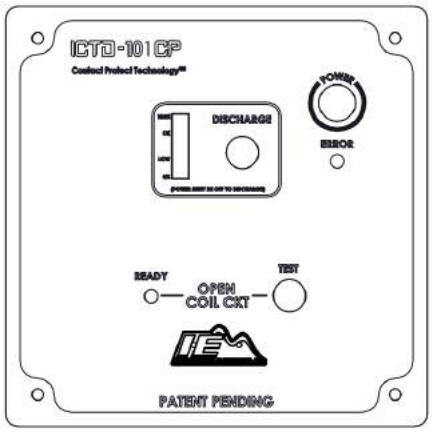

ICTD-101CP

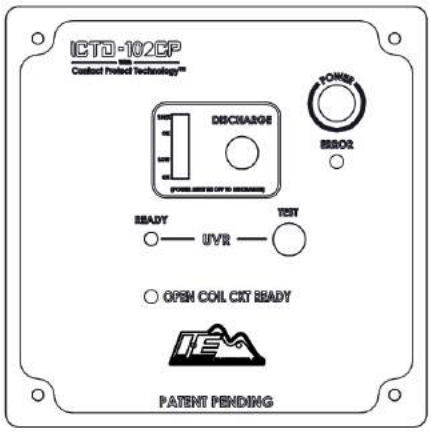

ICTD-102CP

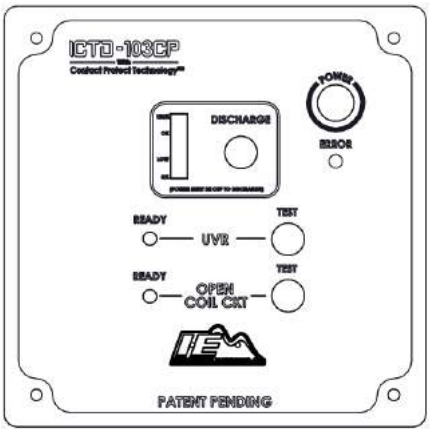

ICTD-103CP

ICTD-103CP Front/Rear

ICTD-10xCP Block Diagram

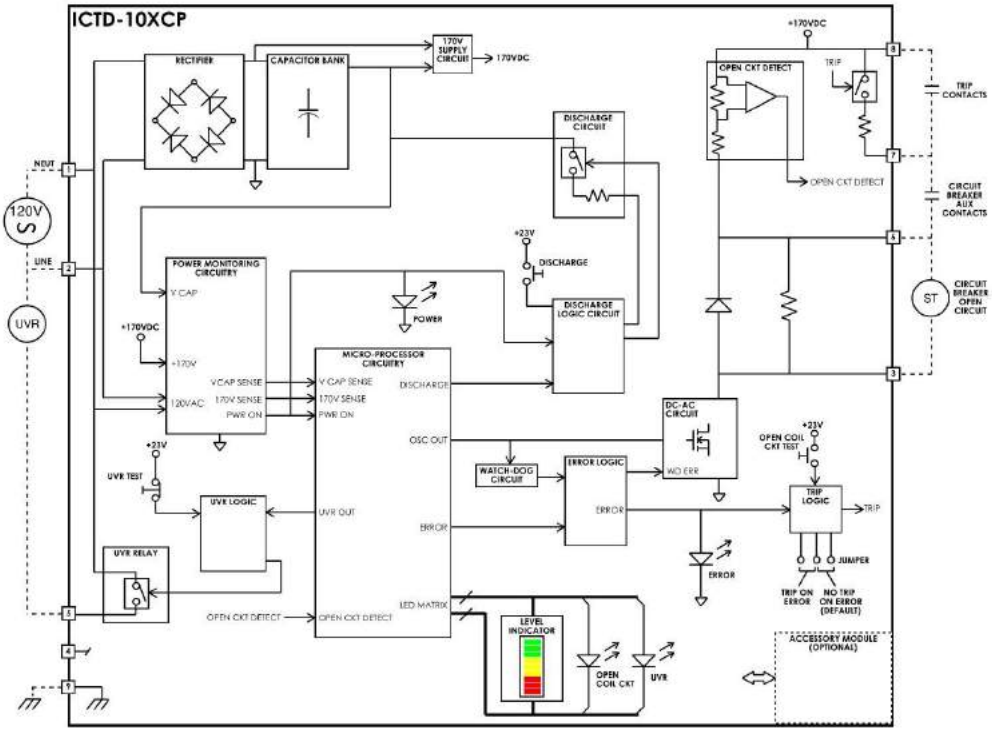

ICTD-10xCP Panel Cutout

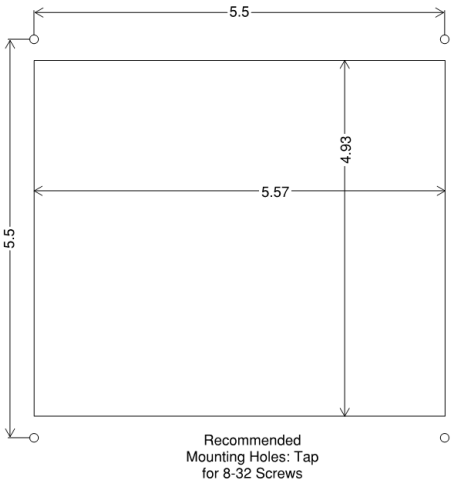

IV: Capacitor Trip Devices

ICTD-1 Capacitor Trip Device with UVR Interlock

The ICTD-1 Capacitor Trip Device is a capacitor bank that stores energy to operate a breaker trip-coil or trip circuit in the event of a temporary loss of 120V AC control voltage.

Primary features of the ICTD-1 include a large 6000uF capacitor bank, a UV interlock feature for enhanced safety and a modern PCB-based design for improved reliability. In addition, a unique shunt impedance selection allows operation with a wide variety of modern and older breakers.

The ICTD-1 also includes the 1100-7110 Expansion Module, which adds a 0-10V output indicating the charge level of the capacitor bank for external monitoring, as well as contacts for remotely operating the UVR Test function.

ICTD-1

Features:

- "Trip Power" lamp: Lit when capacitors are charged
- "Trip Circuit Complete" lamp: Lit when a trip circuit (shunt coil or trip circuit) is in place
- UVR interlock feature: Prevents the breaker from being closed until the ICTD-1 caps are charged
- "UVR Test" button: De-energizes the breaker's UV coil for test purposes
- 1100-7110 expansion module (Included): Allows external charge level monitoring and remote operation of the UV test function
- Shunt impedance jumper: May be set for optimal operation with shunt coils (low-Z) or modern trip circuits (high-Z)
- Modern PCB-based design for durable, reliable operation

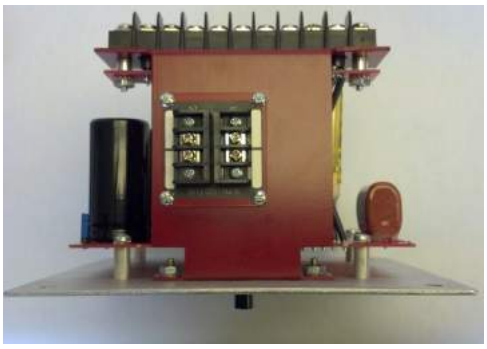

Specifications:

- Capacitor charging time: Approximately 1 Second
- Typical capacitor storage time: 40 Seconds
  (varies for different shunt coils/trip circuits)
- Input voltage: 120 VAC
- "Shunt Z" jumper (on PCB):
  - Use "low-Z" setting for solenoid-type shunt coils
  - Use "high-Z" setting for electronic trip circuits with high impedances
- Output voltage: 160 VDC
- Trip contacts: 10A at 240 VAC resistive

ICTD-1 Wiring Diagram:

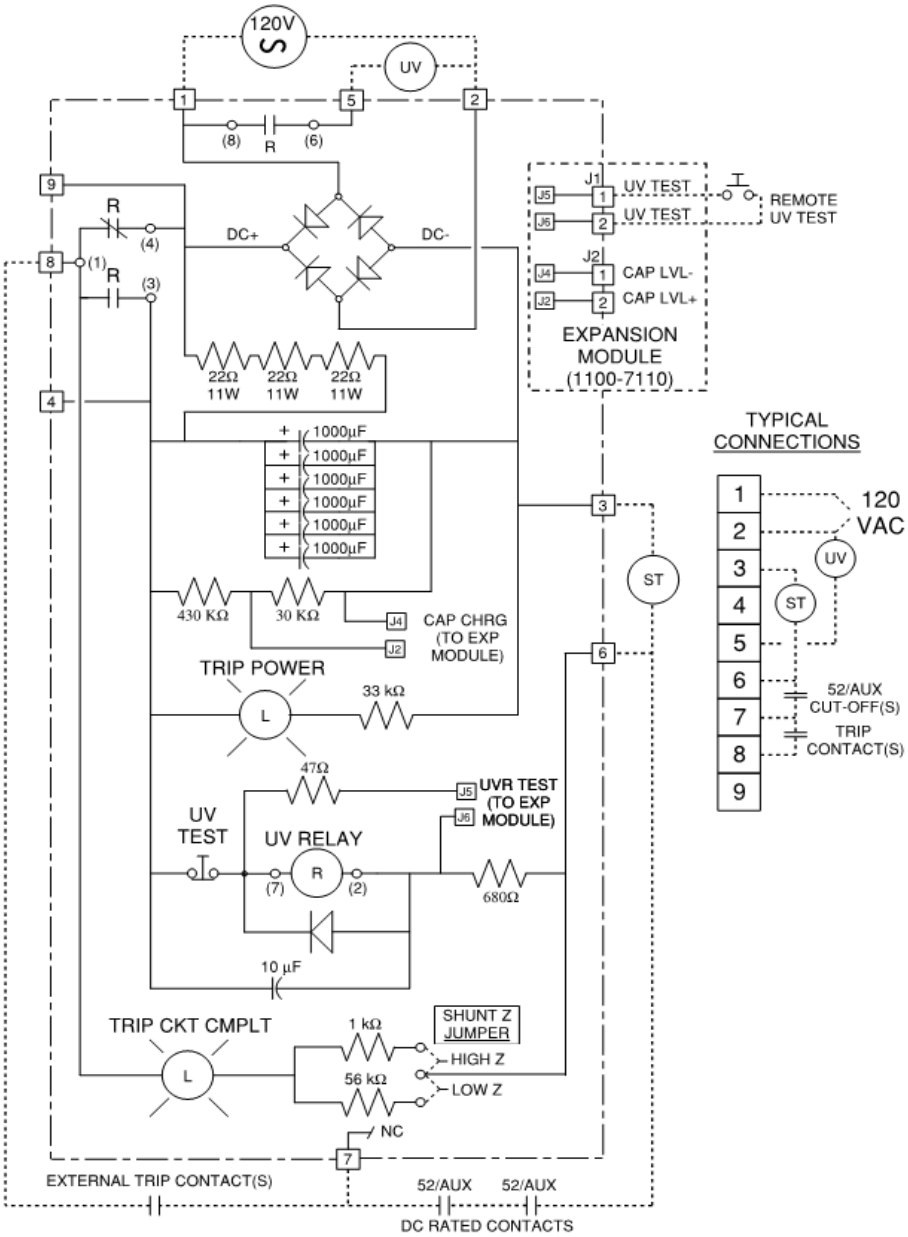

ICTD-1 Panel Cutout:

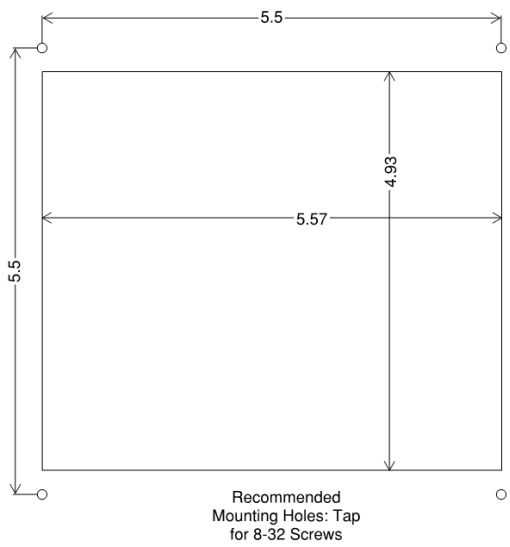

ICTD-2 Capacitor Trip Device

The ICTD-2 Capacitor Trip Device is a capacitor bank that stores energy to operate a breaker trip-coil or trip circuit in the event of a temporary loss of 120V AC control voltage.

Primary features include a large 6000uF capacitor bank, modern PCB-based design for improved reliability, and a unique shunt impedance selection to allow operation with a wide variety of modern and older breakers,

The ICTD-2 also includes the 1100-7110 Expansion Module, which adds 0-10V outputs indicating the charge level of the capacitor bank and the input voltage level for external monitoring.

Features:

- "Control Power" lamp: Lit when unit is powered
- "Trip Power" lamp: Lit when capacitors are charged
- "Circuit Complete" lamp: Lit when a trip circuit (shunt coil or trip circuit) is in place
- 1100-7110 expansion module (included): Allows external charge level and input voltage monitoring
- Shunt impedance jumper: May be set for optimal operation with shunt coils (low Z) or modern trip circuits (high Z)
- Modern PCB-based design for durable, reliable operation

Specifications:

- Capacitor charging time: <1 Second
- Typical cap storage time: 40 Seconds
  (varies for different shunt coils/circuits)
- Input voltage: 120 VAC
- "Shunt Z" jumper (on PCB):
  - "Low-Z" setting for solenoid-type shunt coils
  - "High-Z" setting for electronic trip circuits with high impedances
- Output voltage: 170 VDC
- Trip contacts: 10A at 240 VAC resistive

ICTD-2

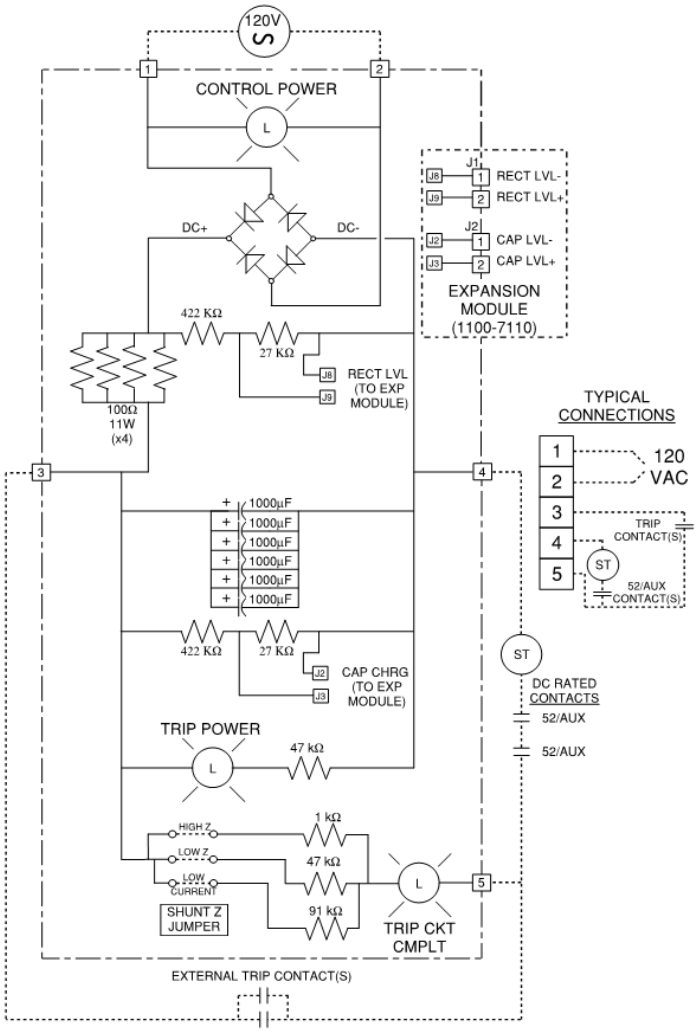

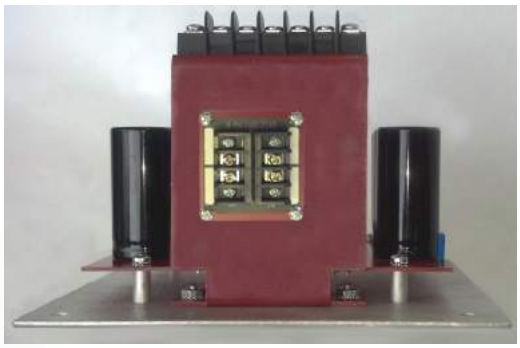

ICTD-2 Front Panel

ICTD-2 Panel Cutout:

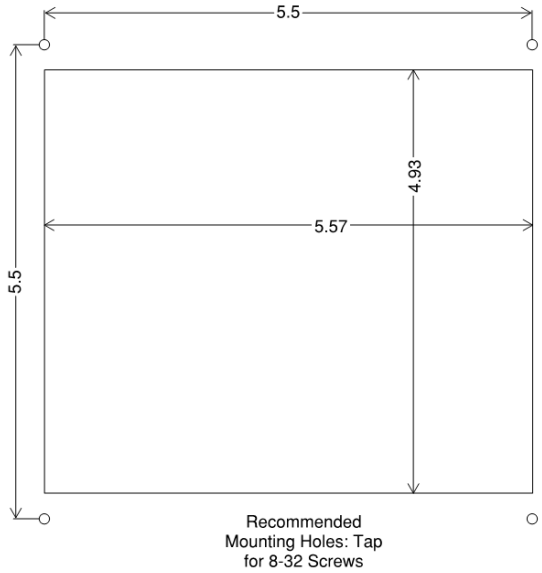

518432 Capacitor Trip Device

In addition to the ICTD family, IE also produces the 518432 Cap Trip Device. This product is primarily offered as a replacement for legacy products. For new designs, the ICTD CTDs are recommended.

518432 Panel Cutout:

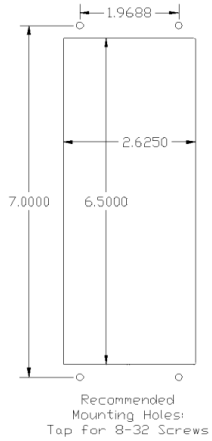

Capacitor Trip Ordering Information

Model	Part #	Description
ICTD-100CP	1100-7004	Capacitor Trip Device w/ Contact Protect Technology,
ICTD-101CP	1100-7005	Same as ICTD-100CP, plus OPEN COIL CKT TEST button
ICTD-102CP	1100-7006	Same as ICTD-100CP, plus UVR Indicator and UVR TEST button
ICTD-103CP	1100-7007	Same as ICTD-100CP, plus UVR Ind., UVR TEST button, OPEN COIL CKT TEST button.
ICTD-1	1100-7002	ICTD-1 Capacitor Trip Device with UVR interlock
ICTD-2	1100-7003	ICTD-2 Capacitor Trip Device
518432	518432	Capacitor Trip Device

Compatible Capacitor Trip Device Accessories

Part #	Description
1020-0075	Fanning Strip, 5 Pos, .375" (Compatible with ICTD-2)
1020-0079	Fanning Strip, 9 Pos, .375" (Compatible with ICTD-1, ICTD-10xCP)

Circuit Breakers

with Visual Disconnects

IE175VB

IE175VB Vacuum Circuit Breaker / Visual Disconnect

Intermountain Electronics' IE175VB vacuum circuit breakers combine a specially designed Visual Disconnect Switch (VDS) with an industry standard Vacuum Circuit Breaker (VCB) integrated into a single compact unit rated for 17.5kV operation at up to 1250A.

These VDS/VCBs are designed to replace legacy 600A and 1200A designs that have been in use for decades. In comparison, the IE175VB offers a globally accepted breaker, a higher quality VDS, and higher voltage and current ratings.

The VDS is opened or closed with an ergonomically designed actuating lever. When the switch is in the open position, all 3 phases are grounded, and a mechanical interlock ensures that the VCB remains open. The VDS can be padlocked/Kirk-locked in the open position. Auxiliary switches are also provided for electrical monitoring/interlocking of the VDS switch position for additional safety.

The VCB provides front panel controls to open or close the VCB, and to charge the spring for manual operation. In addition, the VCB has electrical open and close coils, along with a spring charging motor for remote operation to mitigate arc flash concerns. The VCB includes 10 VCB auxiliary contacts, and a UVR option is available.

To simplify IE175VB installation, IE offers a mounting trim frame (part number 1040-0100P) complete with a safety glass viewing window. This frame makes it easy to install the IE175VB behind a panel, and it includes guard panels to prevent access to the high-voltage area when the breaker's cover is removed. The 1040-0100P comes primed and ready for painting.

Rear Connections:

PATENT PENDING

Features:

VDS

- Ergonomic VDS open/close lever
- Switch contacts easily visible to operator to confirm phases are grounded and VDS is open
- VDS AUX switches to indicate VDS fully open or fully closed
- May be padlocked in open position
- Kirk-lock compatible
- Mechanically interlocked with VCB, electrical interlock possible using VDS AUX switch

VCB

- Industry standard VCB
- Proven technology
- 10 VCB AUX switches, optional UVR
- Front panel controls: VCB On, VCB Off, Spring Charge Lever
- Front panel indicators: VCB On/Off, Spring Charge
- Electrical Remote Control: Open and close coils, spring charge motor

Wiring Diagram:

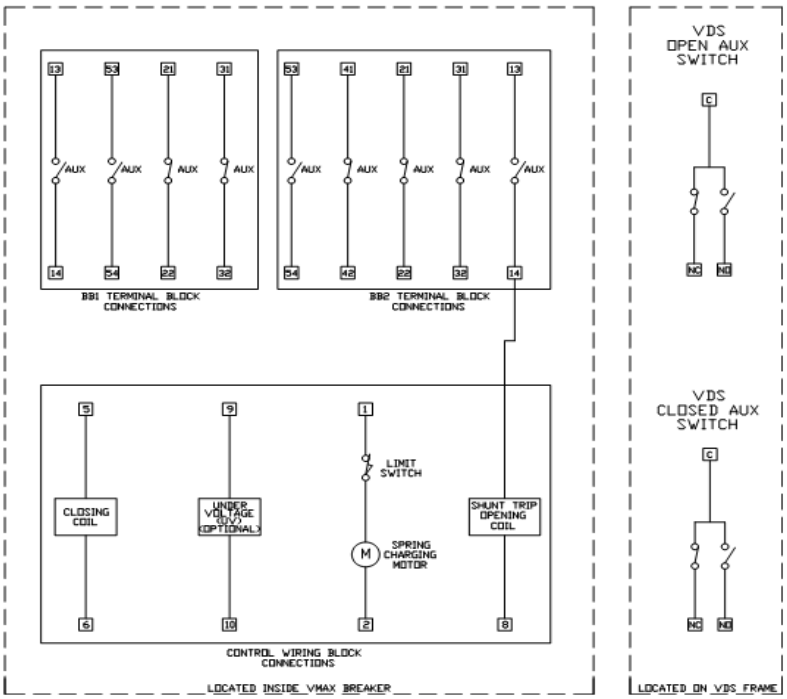

Specifications:

- Continuous current: 1250A
- Interrupting current: 25kA
- Momentary current: 25kA
- Voltage (60Hz): 17.5kV
- Impulse withstand: 95kVBIL

Suggested Installation:

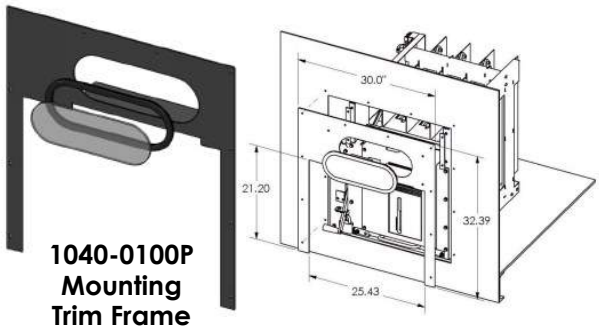

1040-0100P Mounting Trim Frame

IE175VB Ordering Information

Model	IE Part Number	Description
IE175VB-100	1040-0000	IE175 VCB/VDS w/VDS AUX switches, Kirk-lock/Padlock compatibility, spring charge motor, VCB auxiliary contacts (10), remote and manual VCB open, close, spring charge controls
IE175VB-101	1040-0001	IE175 VCB/VDS with all features of the IE175VB-100, plus UVR coil
1040-0100P	1040-0100P	Mounting Trim Frame with viewing window for IE175VB, Primed for painting

PATENT PENDING

IE270VB Vacuum Circuit Breaker / Visual Disconnect

The IE270VB breakers combine a specially designed Intermountain Electronics Visual Disconnect Switch (VDS), with an industry standard Vacuum Circuit Breaker (VCB) integrated into a single compact unit rated for 27 kV operation at 600A.

The VDS can be opened or closed using an ergonomically designed operating lever on the front panel. When this lever is placed in the fully open position, all three phases (load side) are securely grounded and a mechanical interlock ensures the VCB remains open. The VDS provides front panel indicators and auxiliary contacts that actuate when the switch is fully open or fully closed.

The VCB provides front panel controls and indicators to control the VCB. Connections are also available for controlling and monitoring the VCB remotely, as well as ten sets of auxiliary contacts (five NC, five NO).

Front View

Features:

- Ergonomic VDS open/close lever. Switch contacts easily visible to operator to confirm phases are grounded and VDS is open
- VDS AUX switches to indicate VDS fully open or fully closed
- VDS may be padlocked in open position, Kirk-lock compatible
- VDS is mechanically and electrically interlocked with VCB
- Industry standard magnetically actuated VCB, no spring to charge, very few moving parts.
- 10 VCB AUX switches, optional UVR
- Front panel controls: VCB Open, VCB Close
- Front panel indicators: VCB Open/Closed, VDS Open/Closed, Ready, Error
- Full VCB remote control and VCB/VDS monitoring capabilities.

Rear Connections

Control Panel

Control Module / Control Circuits (Front Panel Removed)

Wiring Diagram:

VDS Connections:

VDS AUX 1: (Detects VDS Fully Closed)

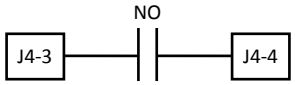

(These signals also available on Expansion Module if installed)

Note: If control power is not present, these contacts will be:

CLOSED	Model IE270VB-000
OPEN	Model IE270VB-001

VDS AUX 2: (Detects VDS Fully Open)

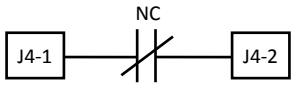

(These signals also available on Expansion Module if installed)

Note: If control power is not present, these contacts will be OPEN.

VCB Connec-

VCB AUXILIARY CONTACTS:

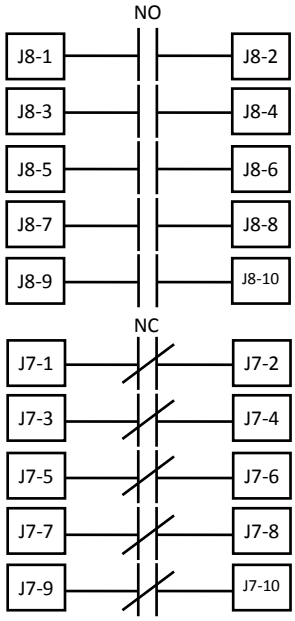

VCB REMOTE CONTROL INPUTS

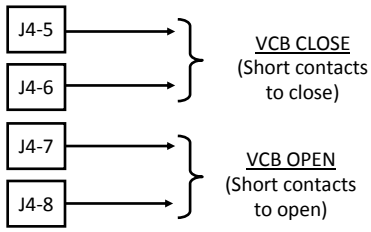

Specifications:

- Continuous Current: 600A
- Voltage: 27 kV (60Hz)
- Momentary Current (1s): 16kA
- Impulse Withstand (BIL): 125kV BIL
- Interrupt Rating (VCB): 16kA

Suggested Installation:

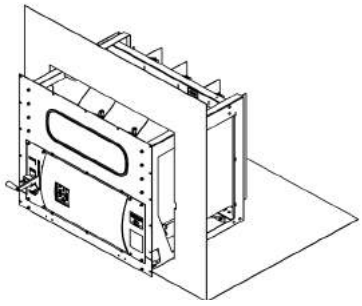

In Front of Panel

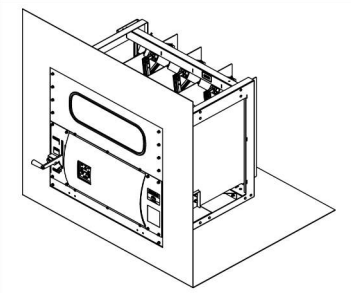

Behind Panel

Dimensions:

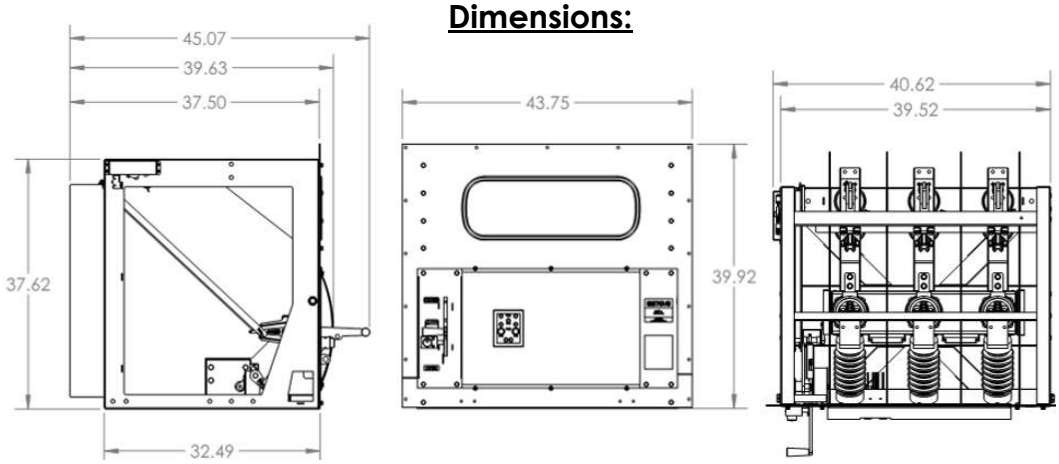

IE175VB Ordering Information

Model	IE Part Number	Description
IE270VB-000	1040-0010	IE270 VCB/VDS w/VDS AUX switches, Kirk-lock/Padlock compatibility, VCB auxiliary contacts (10), remote and manual VCB open, close
IE270VB-001	1040-0011	IE270 VCB/VDS with all features of the IE175VB-100, plus UVR coil

Dry Type Power Transformers

Intermountain Electronics specializes in designing and manufacturing dry type power transformers for the mining, industrial, and utility markets.

With over twenty years of experience in electrical equipment design, and our long standing commitment to quality and customer service, you can be sure that every IE transformer meets the most stringent requirements for performance and reliability.

In addition to standard "off-the-shelf" models, IE specializes in custom transformers designed to meet the needs of your specific application. Please contact Intermountain Electronics for more information.

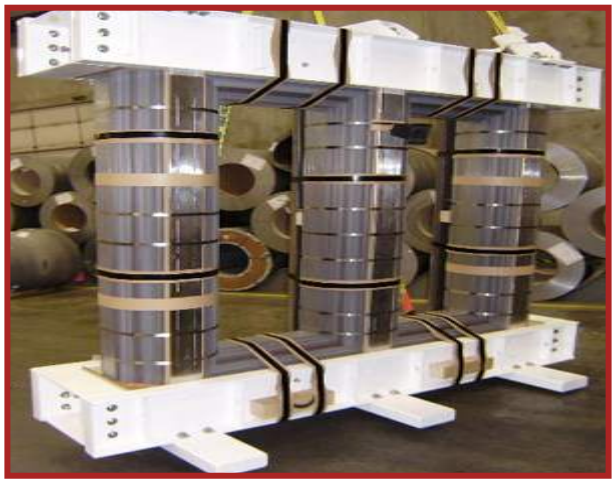

Capabilities

- 5 KVA – 3333 KVA, single phase transformers
- 50 KVA – 7500 KVA, three-phase transformers
- 120 volt – 25,000 volt range
- 10 KV-110 KV Basic Impulse Levels (BIL)
- Current limiting reactors
- Neutral deriving zigzag transformers



IE Transformer Technology:

Windings: Intermountain Electronics uses state-of-the-art winding machines equipped with variable air-actuated tension for each spool of wire and secondary clamp tensioning. This results in very tight coils for maximum durability against short circuit stresses.

Varnish impregnation: To provide maximum protection for the transformers we build, IE uses a two-step varnish process including Vacuum Pressure Impregnation (VPI) as a standard procedure. VPI improves heat dissipation, protects against moisture and contaminate penetration, and eliminates air pockets that can lead to corona or tracking damage. VPI is a vital element in extending the useful life of every IE transformer.

Core Laminations: IE's state of the art core cutting equipment allows us to use multi-step lap mitre core construction for our transformer cores as our standard process. This technology minimizes core losses and sound levels.

Quality Assurance: IE tests every transformer we produce using world-class test equipment, such as our in-house BIL impulse tester and our Phenix test system. IE can test to verify compliance with all applicable IEEE, ANSI, and NEMA standards. If desired, customers may witness transformer testing in person, or from elsewhere, using our remote viewing capability.

Standard Transformers:

Part #	KVA	Primary Voltage	Primary BIL	Sec. Voltage	Temp Rise °C	Elevation (Feet)	Primary Taps	Weight (lbs)	HxWxD (Inches)
1091-0063	500	4160	30 KV	480Y/277	150	3300	2 +/- 2-1/2%	3100	35x42x30
1091-0019	750	4160	30 KV	480Y/277	150	3300	2 +/- 2-1/2%	4000	40x47x32
1091-0161	1000	4160	30 KV	480Y/277	150	3300	2 +/- 2-1/2%	5200	39x56x34
1091-0083	500	12470	60 KV	480Y/277	150	3300	2 +/- 2-1/2%	3600	36x50x36
1091-0211	750	12470	60 KV	480Y/277	150	3300	2 +/- 2-1/2%	4800	37x54x38
1091-0076	1000	12470	60 KV	480Y/277	150	3300	2 +/- 2-1/2%	5500	39x 59x39

Dimensions and weight are approximate. Transformers above are rated for underground mining service. Transformers for other applications also available. Please contact IE for other transformer types.

Custom Transformers:

Intermountain Electronics is a leading supplier of custom dry-type transformers, each one designed and produced to our customer's requirements. ***Please contact IE for more information.***

Plugs and Receptacles

Although fully compatible with the legacy plugs and receptacles that have been used for decades in mining applications, these IE products are 100% modern and innovative, with patented features to streamline installation, simplify every-day use, and reduce down-time.

Intermountain Electronics proudly presents an innovative line of 300A and 600A lever-action plugs and receptacles designed for mine duty.

The result of uncompromising research and development efforts, IE plugs and receptacles are truly revolutionary, boasting proprietary innovations:

- **Patented two-piece insulators allow the insulator face to be replaced from *outside* the power center (receptacle), and *without disconnecting any wiring* (receptacle and plug). Most insulator repairs are now trivial, requiring minimal down-time.**
- **A spring-loaded receptacle dust cover and a foot (or hand) operated release free both hands for maneuvering the plug when connecting it into the receptacle. Making a connection is much easier and faster.**
- **Receptacles may be mounted with optional mounting plates, or with bolts mounted directly to the panel. Nuts for the mounting plate/bolts fit inside recesses in the rear of the receptacle body, so mounting/dis-mounting the receptacle can be done entirely from outside the panel.**

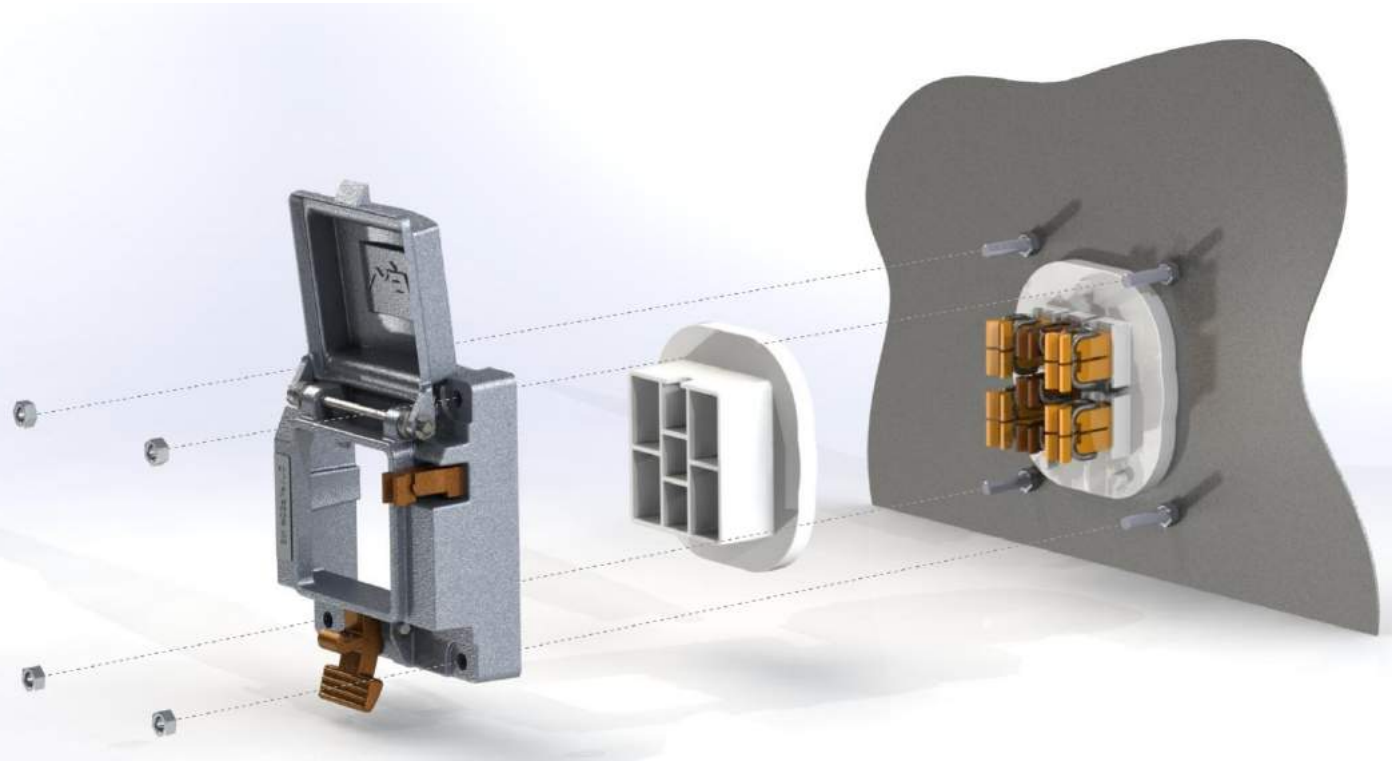

US Patent Number 9,337,593

IRG30 / IPL30 & IRG60 / IPL60 Series

Intermountain Electronics is proud to introduce a new, innovative series of lever-action plugs and receptacles designed for mine duty applications.

Unlike similar products that have been used in mines for decades, these products are completely modern, and they boast patent-pending innovations to dramatically reduce installation and maintenance costs, and to improve ease-of-use.

Upgrading to IE plugs and receptacles is simple, because these new models are 100% compatible with similar products already on the market.

"Hands-Free" Operation:

Connecting a heavy plug with a bulky cable attached to a receptacle has never been a simple operation. However, IE receptacles feature a spring-loaded hands-free dust cover, with an opening lever meant to be operated either by foot or by hand. Making a connection is much simpler—no need to set the plug down to open the dust cover.

Quick and Easy Insulator Repair:

The rugged mining environment exacts a toll on equipment, and mine-duty plugs and receptacles are no exception. A broken insulator is probably the most common problem, and replacing one has traditionally been a major operation.
IE's unique 2-part insulator solves this problem by making the front section of the insulator (the part that gets broken) replaceable without disconnecting cables. For the receptacle, this also means that there is no need to open a panel. Repairing a broken insulator can be completed in just a few minutes.
Replacement insulator fronts are part numbers 2000-0702 (300A) and 2000-0755 (600A).

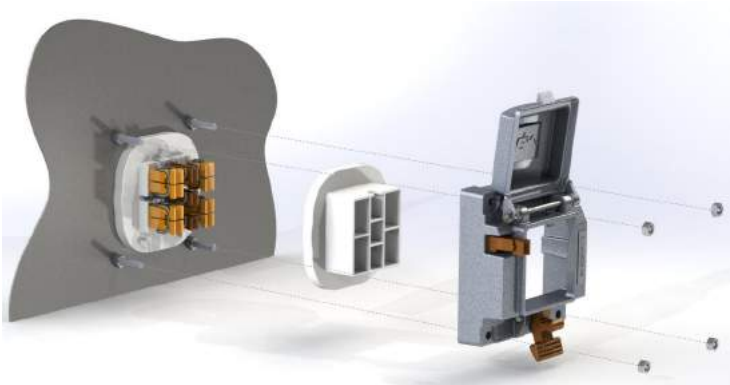

Simple Installation:

IE receptacles can mount into the same panel cut-outs used with other branded products. However, our receptacles feature recesses for mounting nuts, which allow mounting bolts (or our optional mounting plates) to remain attached to the panel when the receptacle is removed. This means that the receptacle can be mounted, or dismounted, without opening the panel.

US Patent Number 9,337,593

Features:

- Hands-free dust cover operation
- 2-Piece insulator for quick field replacement of front section without disconnecting cables or dismounting receptacles
- Receptacle mounting nut recesses allow mounting bolts to remain bolted to the panel when receptacle is removed
- Optional mounting plate further simplifies installation
- Split female contacts and tensioning springs for reliable contact
- Flexible connections allow a wide range of cable sizes
- Integrated cable clamps and sealing grommets on plugs
- Compatible with other brands of plugs and receptacles
- Included mounting fasteners

Specifications:

IRG30 / IPL30:

- 300 Amps RMS operation at 1000 VAC (Line-line) / 600 VDC
- Cable size: Up to 4/O

IRG60 / IPL60:

- 600 Amps RMS operation at 1000 VAC (line-line) / 600 VDC
- Cable size: Up to 250 MCM (E suffix)
  4/O to 500 MCM (U suffix)

IPL60-64

IRG60

IRG60-64

IPL30-67

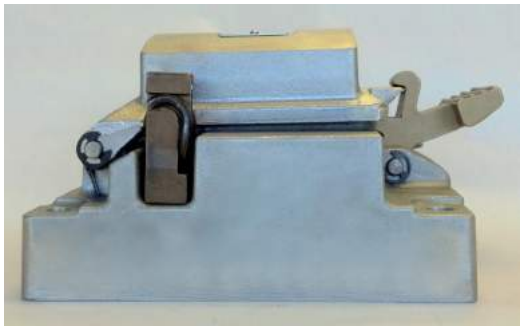

IRG30 with External ground

IRG30-67

300 Amp Plug & Receptacle Ordering Information:

Model	Part #	Description
IRG30-67-00E	1001-0000	Receptacle, 300A, 1000V, Gear Mount
IRG30-67-00EX	1001-0001	Receptacle, 300A, 1000V, Gear Mount, With External GND
IRG30-67-00EG	1001-0002	Receptacle, 300A, 1000V, Gear Mount, With Internal Shell GND
IRG30-39-00E	1001-0004	Receptacle, 300A, 1000V, Gear Mount, Figure 39
IRG30-39-00EX	1001-0005	Receptacle, 300A, 1000V, Gear Mount, Figure 39, External GND
IPL30-67-00E	1001-0100	Plug, 300A, 1000V, Line Mount
IPL30-67-00EX	1001-0101	Plug, 300A, 1000V, Line Mount, With External GND
IPL30-67-00EG	1001-0102	Plug, 300A, 1000V, Line Mount, With Internal Shell GND
IPL30-39-00E	1001-0104	Plug, 300A, 1000V, Line Mount, Figure 39
IPL30-39-00EX	1001-0105	Plug, 300A, 1000V, Line Mount, Figure 39, External GND

300 Amp Plug & Receptacle Accessories:

Part #	Description
2000-0726	Mounting Plate, 300A Receptacle (for 10 gauge panels or thinner)
2000-0751	Keying Plug, 300/600A Receptacle (Not Shown)
2000-0752	Keying Plug, 300A/600A Plug (Not Shown)
2000-0702	Replacement Insulator Front, 300A Plug and Receptacle (Not Shown)

Contact IE for other spare or replacement parts.

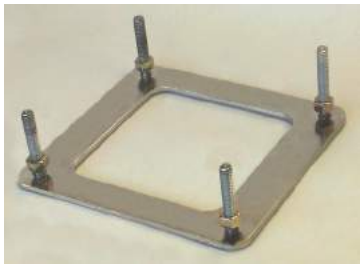

2000-0726 Mounting Plate (300A)

2000-0742 Mounting Plate (600A)

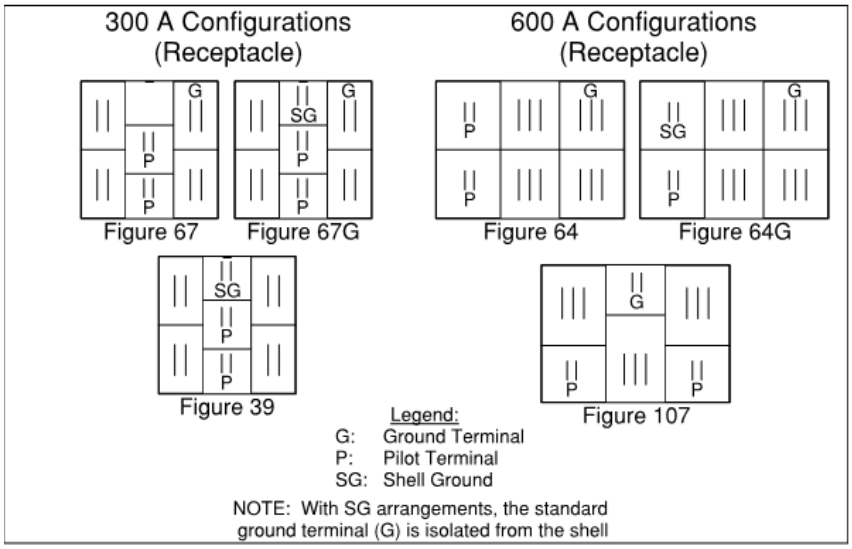

300A and 600A Contact Configurations

600 Amp Plug & Receptacle Ordering Information:

Model	Part #	Description
IRG60-64-00E	1001-0020	Receptacle, 600A, 1000V, Gear Mount, #8-250 MCM
IRG60-64-00EX	1001-0021	Receptacle, 600A, 1000V, Gear Mount, #8-250 MCM, w/ Ext. GND
IRG60-64-00U	1001-0022	Receptacle, 600A, 1000V, Gear Mount, 4/O-500 MCM
IRG60-64-00UX	1001-0023	Receptacle, 600A, 1000V, Gear Mount, 4/O-500 MCM, w/ Ext. GND
IRG60-64-00EG	1001-0024	Receptacle, 600A, 1000V, Gear Mount, #8-250 MCM, w/ Int. Shell GND
IRG60-64-00UG	1001-0025	Receptacle, 600A, 1000V, Gear Mount, 4/O-500 MCM, w/ Int. Shell GND
IRG60-107-00E	1001-0026	Receptacle, 600A, 1000V, Gear Mount, #8-250 MCM
IRG60-107-00EX	1001-0027	Receptacle, 600A, 1000V, Gear Mount, #8-250 MCM, w/ Ext. GND
IRG60-107-00U	1001-0028	Receptacle, 600A, 1000V, Gear Mount, 4/O-500 MCM
IRG60-107-00UX	1001-0029	Receptacle, 600A, 1000V, Gear Mount, 4/O-500 MCM, w/ Ext. GND
IPL60-64-00E	1001-0120	Plug, 600A, 1000V, Line Mount, #8-250 MCM
IPL60-64-00EX	1001-0121	Plug, 600A, 1000V, Line Mount, #8-250 MCM, w/ Ext. GND
IPL60-64-00U	1001-0122	Plug, 600A, 1000V, Line Mount, 4/O-500 MCM
IPL60-64-00UX	1001-0123	Plug, 600A, 1000V, Line Mount, 4/O-500 MCM, w/ Ext. GND
IPL60-64-00EG	1001-0124	Plug, 600A, 1000V, Line Mount, #8-250 MCM, w/ Int. Shell GND
IPL60-64-00UG	1001-0125	Plug, 600A, 1000V, Line Mount, 4/O-500 MCM, w/ Int. Shell GND
IPL60-107-00E	1001-0126	Plug, 600A, 1000V, Line Mount, #8-250 MCM
IPL60-107-00EX	1001-0127	Plug, 600A, 1000V, Line Mount, #8-250 MCM, w/ Ext. GND
IPL60-107-00U	1001-0128	Plug, 600A, 1000V, Line Mount, 4/O-500 MCM
IPL60-107-00UX	1001-0129	Plug, 600A, 1000V, Line Mount, 4/O-500 MCM, w/ Ext. GND

600 Amp Plug & Receptacle Accessories:

Part #	Description
2000-0742	Mounting Plate, 600A Receptacle (for 10 gauge panels or thinner)
2000-0733	Replacement Insulator Front, 64 series Plug and Receptacle (Not Shown)
2000-0760	Replacement insulator front, 107 series Plug and Receptacle (Not Shown)
2000-0751	Keying Plug, 300/600A Receptacle (Not Shown)
2000-0752	Keying Plug, 300A/600A Plug (Not Shown)

Contact IE for other spare or replacement parts.

Receptacle Panel Cutouts:

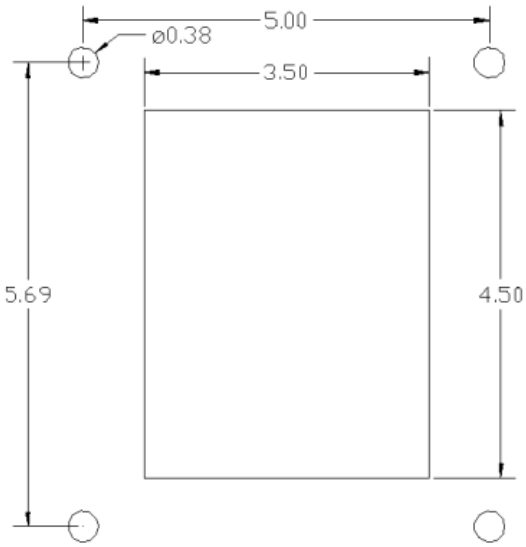

300 Amp

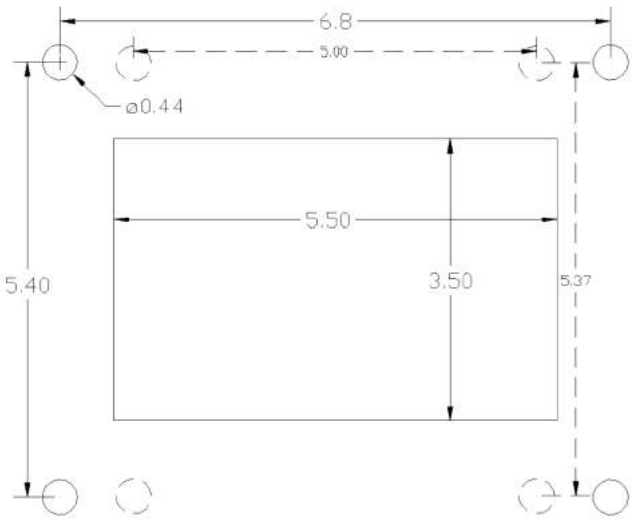

600 Amp

Note: Along with recommended mounting holes, IRG60s also have tapped holes (5/16" screw, dotted lines above) to allow mounting in cutouts for 600A receptacles from other companies.


IEM
INTERMOUNTAIN ELECTRONICS, INC.
www.intermountainelectronics.com
1-15-637-7159

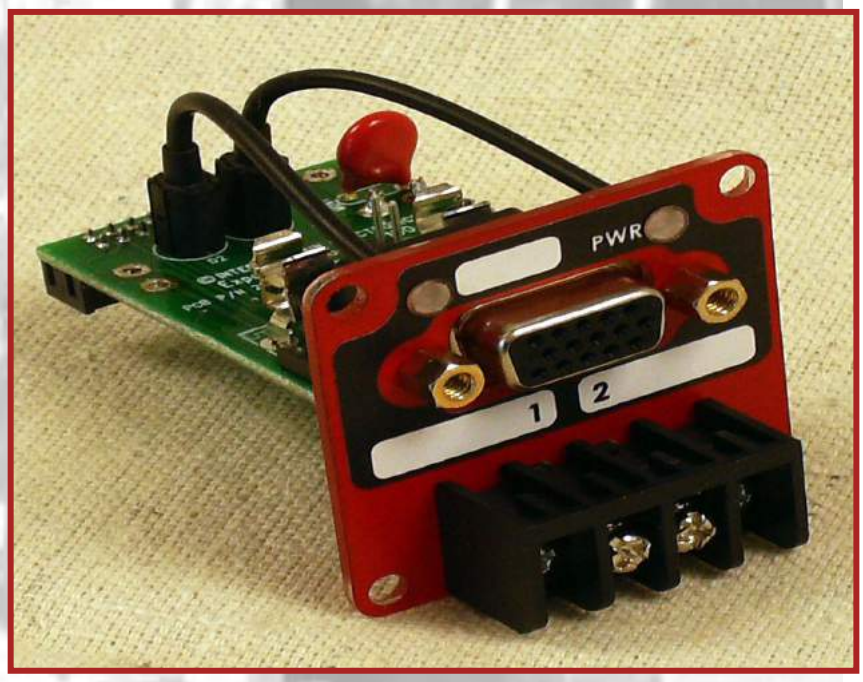
PWR
1
2

Accessories, Cable Assemblies and Cable

Various Accessories

Intermountain Electronics offers an array of high-quality power system accessories designed for the rugged environments of industrial power systems.

IE Expansion Modules are plug-in accessories that are compatible with a variety of IE products such as the GLT-500 and GLT-500-1 continuity ground monitors and the ICTD capacitor trip devices. When installed in IE products, these expansion modules enhance the flexibility and connectivity of the product.

IE also produces accessories for clamping and handling cables, including cable clamps, cable glands, and insulated hot sticks.

Other accessories produced by IE include a line of conveyor remote switches and related accessories, fanning strips to simplify installation of IE electronic components, louver panels to improve ventilation where temperature control is an issue, and in-line Ethernet protection couplers.

Other accessory items are included in other parts of this catalog. For example, ground monitor accessories (PWDs, GWDs, etc.) are found in the ground monitor section.

Cable/Cable Assemblies

Cable assemblies have been an IE specialty for over 15 years. In that time, we have produced many thousands of cables and cable assemblies for our customers.

In addition to off-the-shelf items, IE sells custom cable assemblies to meet almost any power system need. Please contact us if for any cable assembly that is not included in our standard product line.

IE Expansion Modules

Intermountain Electronics expansion modules are compatible with IE products such as the GLT-500 and GLT-500-1 continuity ground monitors, and the ICTD Capacitor Trip Devices. When installed in IE products, these expansion modules enhance the flexibility and connectivity of the product.

For example, in the GLT-500, the 1100-7110 expansion module provides access to relay NC contacts and circuit breaker AUX contacts. These signals are not accessible without an expansion module.

The 1100-7100 expansion module provides even more flexibility. A 15-pin mini-D Sub connector provides access to "internal" signals. For example, in the GLT-500, this module provides current sense signals, and the outputs of the various current detectors. Access to these signals allows trouble-shooting and system monitoring capabilities never before possible.

These analog signals may also be monitored by PLCs, which can provide data storage, or remote monitoring and control (features vary between products) over computer networks.

Installation is straight-forward, and can be performed in the field, or at Intermountain Electronics (recommended). IE products can also be ordered directly from the IE factory with expansion modules already installed (contact IE for details).

At Intermountain Electronics, we are committed to constantly improving the value of our products and services for our customers. Expansion modules are one result of this commitment.

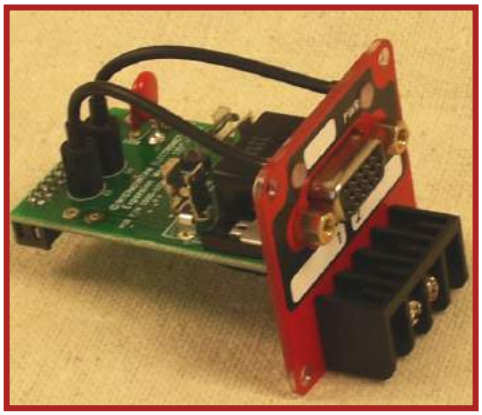

1100-7100 Expansion Module w/ D-Sub and Barrier Strip:

This expansion module includes a 2-pin barrier strip for use with relay contacts (rated at 120V / 5A) and a female 15 pin mini-D-Sub connector for small-signal analog or digital input/output signals. The D-Sub also includes power supply signals suitable for powering external devices with modest power requirements.

When installed in a compatible IE product, this module provides signals and features that would otherwise not be available. Capabilities and signals vary depending on the host product the module is installed into (refer to the manual for more information).

The module also includes two indicators: a green power indicator, and a red indicator whose purpose depends on the host product.

Installation can be performed in the field, but factory installation is highly recommended. Products can be ordered directly from IE with this module pre-installed.

Included with each module is a wire-set with pre-terminated wires and cables necessary to install the module. Also included is a male 15-pin mini D-Sub wire-end connector that can be used to create customer-specific cables to interface with the module.

Features

- 15-pin Mini-D Sub connector, designed for use with analog and control signals (inputs or outputs)
- 2-pin barrier strip rated for use with relay/aux contacts
- Green LED power indicator
- Red LED indicator
- Includes all pre-terminated wires and ribbon cable needed for installation
- Male 15-pin Mini-D Sub connector and hood included for creation of customer-specific cables
- Write-able front panel label allows red LED / barrier strip pins to be marked with signal assignment

Specifications

- Barrier strip signals: 120 VAC/5A
- D-Sub signals:
  - Gen'l Purpose in/out (10 total): 470 Ω buffered, rated for small signal use only. Suggested load resistance: 10kΩ.
  - Low Impedance in/out (2 total): Rated for small signal use only.
  - Ext. Pwr Supply (+V, GND), 95mA max.
- When used with GLT-500, GLT-500-1:
  - Barrier terminals: Add NC/C relay contacts or latching breaker aux (NO or NC/C) contacts.
  - D-Sub: Adds 0-12V indication for various current measurements, etc. Also includes 24VDC (unreg.) supply for external circuitry. Refer to 1100-7100 manual for details.
  - Indicators: Green power indicator, Red Trip indicator

Mechanical Configuration

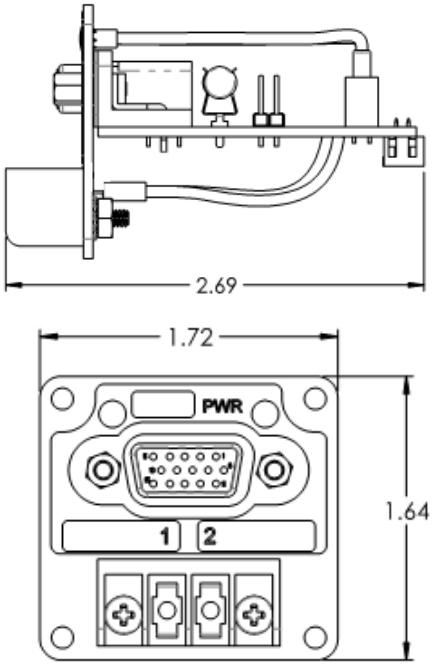

1100-7110 Expansion Module w/ Dual Barrier Strips:

This expansion module includes two 2-pin barrier strips rated for use with relay contacts (120V / 5A).

When installed in a compatible IE product, these connectors provide additional signals that would otherwise be unavailable. These added signals allow new connectivity options, and add new product features and capabilities.

Installation can be performed in the field, but factory installation is highly recommended. Products can be ordered directly from IE with this module pre-installed.

Included with each module is a wire-set with all pre-terminated wires necessary to install the module into compatible IE products.

Features

- Two 2-pin barrier strips rated for use with relay/aux contacts
- Includes all pre-terminated wires needed for installation
- Write-able front panel label allows barrier strip pins to be marked with signal assignments

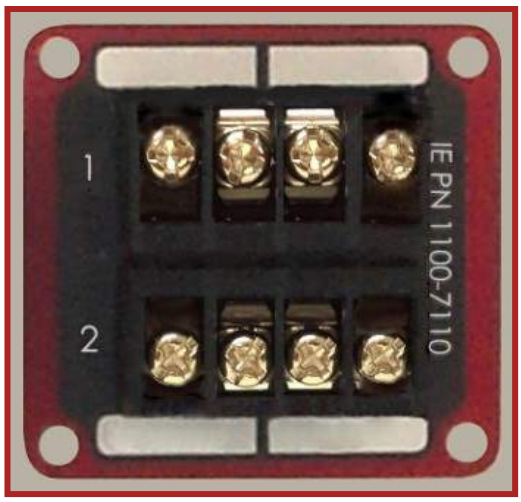

Specifications

(Both Terminal Pairs)

- Operating Voltage: 120VAC nominal
- Operating Current: 5 Amps RMS
- Compatible products:
  - GLT-500/GLT-500-1: Adds NC/C relay contacts and latching breaker AUX (NO or NC/C) contacts
  - ICTD-1: Adds 0-10V indication for cap charge level and remote operation of UVR test function
  - ICTD-2: Adds 0-10V indication for cap charge and input voltage levels.

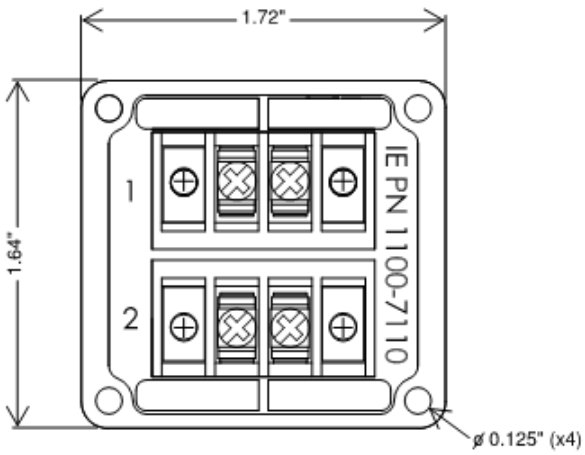

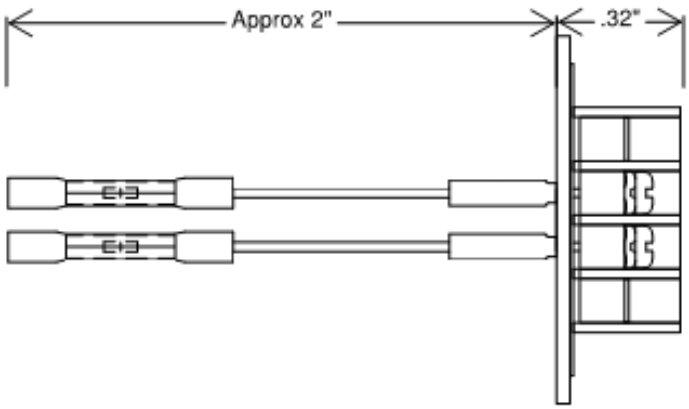

Accessory Module Ordering Information

Part #	Description
1100-7100X	Expansion Module w/ D-Sub and Barrier Strip
1100-7110X	Expansion Module w/ Dual Barrier Strips

Ethernet Protection

IE's Ethernet protection coupler is a bi-directional "pass-through" coupler, which provides in-line fuse protection for Ethernet equipment. This module is designed for MSHA systems with Ethernet ports, or for any other application where protection of costly Ethernet equipment is desirable. The coupler is shielded, and provides fusing for all 8 Ethernet connections. Compatible with modern Ethernet installations (10BASE-T, 100BASE-T), including Power Over Ethernet (POE) applications.

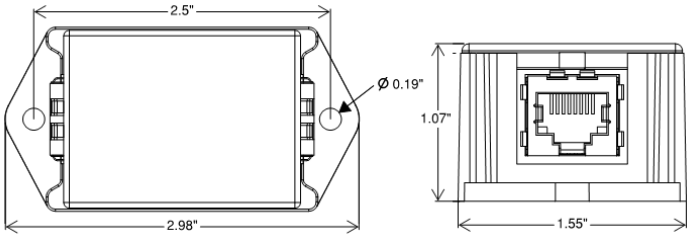

Ordering Information

Part #	Description
1100-9000	Ethernet Inline Protection Coupler

Cable Clamping and Handling Accessories

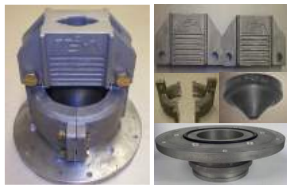

1001-0200 IE Cable Gland Kit: Designed for 1.2" - 3.312" cables. Machined steel mounting flange, cast aluminum clamp and housing. Includes sealing O-ring and grommet, along with necessary fasteners to assemble the gland.

IE Cable Clamps: Cable clamp with insulators, fasteners, and 18" anchoring chain. Provides strain relief to protect cable connections. 3 Sizes available to cover a wide range of cable diameters. Clamping chain may be secured with a 3/8" bolt (or similar).

Hot Sticks: IE Hot Sticks are made with heavy-duty steel hooks and D-ring handles solidly attached to insulating handles. Each hot stick is high voltage tested to ensure safety (independent 3rd-party laboratory testing is also available—contact IE for details). Available in various lengths (including custom lengths). All lengths are rated for 75 kV (VDC, 1 minute).

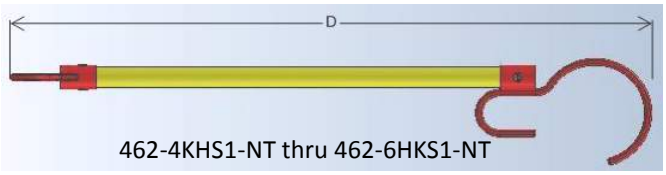

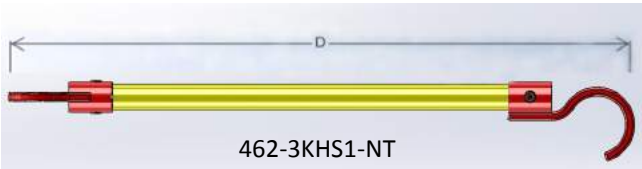

Ordering Information

Part #	Description
1001-0200	Cable Gland Kit, 1.2" - 3.312" Cables
C44-1	Cable Clamp, for 5/16" - 1-1/16" Cables
C44-2	Cable Clamp, for 1-1/16" - 2-1/4" Cables
C44-3	Cable Clamp, for 2-1/4" - 3" Cables
462-3KHS1-NT	Hot Stick, 11mm Hook, Length (D) = 36"
462-4KHS1-NT	Hot Stick, Length (D) = 45"
462-6KHS1-NT	Hot Stick, Length (D) = 63"
462-7KHS1-NT	Hot Stick, Length (D) = 72"

Conveyer Belt Remote Switches/Accessories

Belt Remote Switch with 2-Position (Go/Stop) Switch: 12" x 12" placard with "BELT REMOTE SWITCH" text. Daisy chain cabling with Woodhead* connectors. Available with 5' or 3' pigtails. Part numbers: 340599C, 340610C.

Belt Remote Switch with Push-Pull Switch: 12" x 12" placard with "BELT REMOTE SWITCH" text. Daisy-chain cabling with Woodhead* connectors. Available with 5' or 3' pigtails. Part numbers: 340623C, 340624C.

340605C Molded T Cable Assembly: Daisy chain cabling with Woodhead* connectors, 3' pigtail. Compatible with 340609C Placard (below) or may be used with customer supplied switch and placard.

340609C Placard w/ 2-Position Switch: (Not Shown) 12" x 12" placard. Compatible with Molded T Cable Assemblies (above) or may be used with customer supplied cabling.

Conveyor Remote Switch Cables: (Not Shown) Compatible with switches and T Assembly above. Available with 14 AWG (14/3) wire or 12 AWG (12/3) for systems with longer runs. 500' and 200' are standard lengths. Custom lengths are also available. Standard Part numbers: 340598C, 340604C, 340621C, 340622C.

340601C Conveyor Remote Terminator w/ LED: Terminator required at the last conveyor belt remote switch to complete the remote switch line. Compatible with remote switches and cables above.

1020-0020 Pull-Cord Assembly with Horn and Strobe: Belt remote switch allows conveyor to be stopped/re--started via a pull cable (not included) running between pull cord assemblies. Pull cord assemblies are "daisy-chained with electrical cables (below). Includes lock-out lever to prevent accidental belt start during maintenance.

1020-0023 Pull-Cord Assembly Cable: 510' electrical cable (Not Shown) with compatible connectors to be used between 1020-0020 pull cord assemblies.

Conveyer Belt Remote Switches/Accessories Ordering Information

Part #	Description
340599C	Conveyor Remote Switch, 2-Position Switch, 5' Pigtail
340610C	Conveyor Remote Switch, 2-Position Switch, 3' Pigtail
340623C	Conveyor Remote Switch, Push-Pull Switch, 5' Pigtail
340624C	Conveyor Remote Switch, Push-Pull Switch, 3' Pigtail
340605C	Molded T Cable Assembly
340609C	Placard w/ 2 Position Switch, 3' pigtail
340598C	500' Conveyor Remote Switch Cable, 14 AWG (14/3)
340621C	500' Conveyor Remote Switch Cable, 12 AWG (12/3)
340604C	200' Conveyor Remote Switch Cable, 14 AWG (14/3)
370622C	200' Conveyor Remote Switch Cable, 12 AWG (12/3)
340601C	Conveyor Remote Terminator w/ LED
1020-0020	Pull-Cord Assembly with Horn and Strobe
1020-0021	Two 1020-0020 Pull-Cord Assemblies with 1020-0023 510' Cable
1020-0022	1020-0020 Pull-Cord Assembly with 1020-0023 510' Cable
1020-0023	Pull-Cord Assembly Electrical Cable, 510'

Fanning Strips

IE fanning strips provide a convenient method of connecting to IE electronic products, as well as many products from other manufacturers. These fanning strips are compatible with standard .375" center barrier strips, such as the Molex* BEAU series.

Each fanning strip includes the PCB and wire-ties. The PCB accepts up to 16 AWG wires (see installation examples, wires not included), which can be added to create customer-specific wiring harnesses.

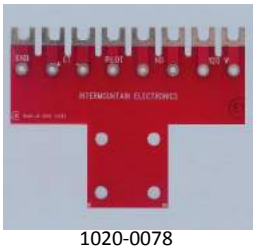

1020-0078

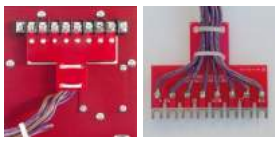

Installation Examples

Part #	Description
1020-0075	Fanning Strip, 5 Position, .375" (not shown)
1020-0076	Fanning Strip, 6 Position, .375" (not shown)
1020-0078	Fanning Strip, 8 Position, .375"
1020-0079	Fanning Strip, 9 Position, .375" (not shown)

Louver Panels

IE offers rugged 16 GA CRS louver panels in several sizes. Each panel is designed for maximum ventilation, with custom designed 3.25" louvers for increased air-flow. Standard panel sizes are shown below (custom sizes are also available). All panels have either .25x.625" male stud inserts (as shown) or .375" diameter mounting holes. Panels are primed for painting.

Part #	Description	Panel Size (HxW)
2902-5001P	16 GA Cold Rolled Steel (CRS), 40 x 8 vents, w/ .25" mntg stud inserts	40" x 32"
2902-5101P	16 GA Cold Rolled Steel (CRS), 40 x 8 vents, w/ .375" mntg holes	40" x 32"
2902-5002P	16 GA Cold Rolled Steel (CRS), 19 x 8 vents, w/ .25" mtng stud inserts	20" x 32"
2902-5102P	16 GA Cold Rolled Steel (CRS), 19 x 8 vents, w/ .375" mntg holes	20" x 32"
2902-5003P	16 GA Cold Rolled Steel (CRS), 34 x 6 vents, w/ .25" mntg stud inserts	34" x 24"
2902-5103P	16 GA Cold Rolled Steel (CRS), 34 x 6 vents, w/ .375" mntg holes	34" x 24"
2902-5004P	16 GA Cold Rolled Steel (CRS), 34 x 4 vents, w/ .25" mntg stud inserts	34" x 18"
2902-5104P	16 GA Cold Rolled Steel (CRS), 34 x 4 vents, w/ .375" mntg holes	34" x 18"
2902-5005P	16 GA Cold Rolled Steel (CRS), 4 x 34 vents, w/ .25" mntg stud inserts	18" x 34"
2902-5105P	16 GA Cold Rolled Steel (CRS), 4 x 34 vents, w/ .375" mntg holes	18" x 34"
2000-1604P	16 GA Cold Rolled Steel (CRS), 4 x 2 vents, w/ .25" mntg holes	5.625" x 7.5"

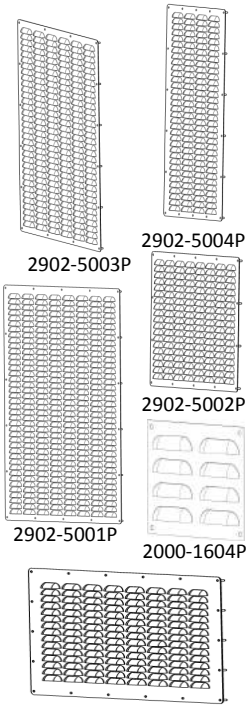

2902-5003P 2902-5004P 2902-5002P 2902-5001P 2000-1604P 2902-5005P

Molded Case Circuit Breaker Rear Mount Panels

These IE mounting panels allow the molded case circuit breakers to be front-mounted mounted on a permanently mounted insulator panel, while phase and load cable connections are made on the rear side of the panel. Breakers can then be replaced without needing to disconnect wiring or access behind the panel.

Part #	Description	Panel Size (HxW)
1030-0100	Rear Mount Breaker Panel, N-Frame	20" x 8.5"
1030-0101	Rear Mount Breaker Panel, K-Frame (Not Shown)	20" x 6"
1030-0102	Rear Mount Breaker Panel, F-Frame (Not Shown)	20" x 6"
1030-0103	Rear Mount Breaker Panel, L-Frame (Not Shown)	25" x 10.63"

Rear Connections

Installation

1030-0102

* Molex and BEAU are registered trademarks of Molex Incorporated

IE Cable Assemblies and Cable

For more than 15 years, IE has been producing cable assemblies for mining and industrial power systems. We work with a wide variety of cable types, including:

- 12/3, 14/3, 14/4,16/6, 18/8 (600V, SOOW, neoprene jacket)
- GGC, SHD-GC, MP-GC mining power cables
- TC and TC-ER tray cable
- Interlocked armor and continuously corrugated welded armor power cable
- Teck 90 armored power cable
- DLO Cable
- And more...

Cable Assemblies

IE produces a nearly unlimited assortment of standard and custom cable assemblies. We install mine-duty plugs (300A, 600A, etc.), XP connectors, and all other types of industry standard connectors. Popular standard and custom cable assemblies include:

- Cable assemblies and cables for Conspec* systems
- Long-wall face phone cables
- "Wheat"-style battery assemblies for Joy* equipment
- And many more…

IE has produced thousands of custom cable assemblies for our customers. If you do not see what you need here, please contact us to order assemblies made to your custom specifications.

Cable Assemblies for Consepec© Systems

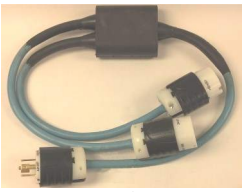
ZY04

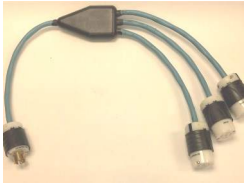
ZW08


ZF05


ZM05


Z200/Z500

Cable Assemblies for Long-Wall Face Phone Systems


166xxx family long-wall face phone cables (Connector on both ends)


166COUPLER (Used to couple two long-wall face phone cables)

Cable Assemblies for Joy© Equipment


601843-186


601843-15

Standard Cable Assemblies Ordering Information

Part #	Description
ZY04	Y Cable for Conspec* Systems
ZW08	W Cable for Conspec* Systems
ZF05	Pigtail, 5', Female for Conspec* Systems
ZM05	Pigtail, 5', Male for Conspec* Systems
Z200	200' Cable with Connectors, for Conspec* Systems (custom lengths available)
Z500	500' Cable with Connectors, for Conspec* Systems (custom lengths available)
Z500P	500' Cable, for Conspec* Systems, Twist-Lock Connectors (not shown, custom lengths available)
166xxx	Long-Wall Face Phone Cable: Six conductor cable (6-16 SOOW) inside rugged 3/4" ID mine conduit. Water-tight connectors on both ends. Available in standard or custom lengths. Standard lengths include: 10' (PN = 16610) 70' (PN = 16670) 96' (PN = 16696) 120' (PN = 166120) (Please contact IE for custom lengths)
166COUPLER	Used to join two long-wall face phone cables to make a longer cable.
I601843-15	Wheat Battery Assembly for JOY* Equipment, 5-pin: 4' heavy-duty cable with neoprene jacket. High quality 5-pin circular connector with strain relief.
I601843-186	Wheat Battery Assembly for JOY* Equipment, 6-pin: 4' heavy-duty cable with neoprene jacket. High quality 6-pin circular connector with strain relief.

(Also see Conveyor Remote Switch Accessories section for Conveyor Remote Switch Cables)

Cables

Intermountain Electronics stocks the common types of cable that our customers need. These cables are available in standard lengths (250', 500', 1000') or in custom lengths specific to your application.

Part #	Description	Cable Type
2910-0LLL	Trunk Cable for Conspec* systems. 4 Conductor, Shielded	2x 12 AWG, 2x 18 AWG
2910-1LLL	12/3 SOOW Cable, 600V, Black Neoprene Jacket	3x 12 AWG
2910-2LLL	14/3 SOOW Cable, 600V, Black Neoprene Jacket	3x 14AWG
2910-3LLL	14/4 SOOW Cable, 600V, Black Neoprene Jacket	4x 14 AWG
2910-4LLL	16/6 SOOW Cable, 600V, Black Neoprene Jacket	6x 16 AWG
2910-5LLL	18/8 SOOW Cable, 600V, Black Neoprene Jacket	8x 18 AWG
2910-6LLL	DLO Cable, 2kV, 90° C, Copper, Black Jacket	10 AWG
2910-7LLL	DLO Cable, 2kV, 90° C, Copper, Black Jacket	8 AWG
2910-8LLL	DLO Cable, 2kV, 90° C, Copper, Black Jacket	6 AWG
2910-9LLL	DLO Cable, 2kV, 90° C, Copper, Black Jacket	4 AWG
2911-0LLL	DLO Cable, 2kV, 90° C, Copper, Black Jacket	1-0
2911-1LLL	DLO Cable, 2kV, 90° C, Copper, Black Jacket	2-0
2911-2LLL	DLO Cable, 2kV, 90° C, Copper, Black Jacket	4-0
2911-3LLL	15 kV, Non-Shielded Cable, 7-Strand Copper, Black Jacket	2 AWG
2911-4LLL	15 kV Non-Shielded Cable, 19-Strand copper, Black Jacket	4-O
2911-5LLL	Trunk Cable for Modbus Systems. 4 Conductor, Shielded	2x 12 AWG, 2x 18 AWG
Various	Mine-duty cables (GCG, SHD-GC, etc.) for MV/HV applications (Call IE for details/availability,)	Various

LLL = length: 250=250', 500=500', 1K0 = 1000'

Custom lengths also available. Please contact IE for custom orders.

* Conspec is a registered trademark of Conspec Controls
*JOY is a registered trademark of Joy Global Inc.

IE Services and Distribution

Intermountain Electronics works hard to be the first choice when it comes to electrical distribution and control systems and services for a broad range of applications, including **mining, oil and gas, tunneling, power generation/distribution, and municipal/government.**

In addition to the IE Components featured in this catalog, Intermountain Electronics provides a wide range of custom systems, services and distributed products:

Intermountain Electronics Services

- **Custom power centers and other power systems for a wide range of applications (Mining, Oil & Gas, Municipal, …)**
- **E-Houses (Electrical buildings of various types. Wired/equipped or empty.)**
- **Switch-gear**
- **Sub-stations**
- **UL-508A certified panel shop**
- **Engineering services**
- **Electronic component repair**
- **Long-wall controls**
- **Power center / switch-gear refurbishing**
- **Circuit breaker repairs**

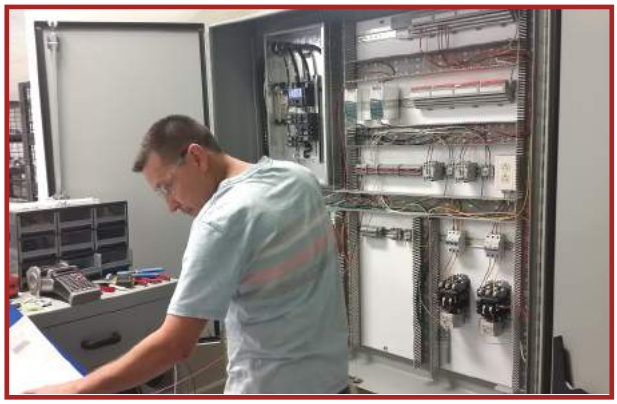

UL-508A Panel Shop

Intermountain also distributes a wide variety of quality products and brands to meet almost every one of our customer's needs. Please check our website (www.intermountainelectronics.com) for full list of distributed brands and products.

Intermountain Electronics Distribution

- **Environment monitoring systems**
- **Electronic test equipment**
- **Electrical control (breakers, controllers, relays and protection, ...)**
- **Cabling systems**
- **Wired and wireless communications and personnel tracking systems**
- **XP enclosures and components**
- **Laser alignment/leveling equipment and accessories**
- **Conveyer and motor control protection systems**
- **And more**

Important Notices:

While every effort has been made to make sure the information in this document is accurate, IE cannot guarantee that there are no errors. Users of IE products should verify any aspects of the product that are critical to their application, and in particular, to any aspects that may affect the safety of the overall system or installation.

Product designs and specifications may change without notice.

Notes:

Notes:

Mining | Oil & Gas | Tunneling | Power Generation
Utilities | Government | Municipalities

Electronic and Electro-Mechanical Components

Price, Utah facility

Contact Intermountain Electronics:

Phone: (435) 637-7160
Fax: (435) 637-9601
Web: www.intermountainelectronics.com
E-mail: iecomponents@ie-corp.com

Price, Utah | Denver, Colorado | South Point, Ohio | Centralia, Illinois
Hermosillo Mexico | Washington, Pennsylvania