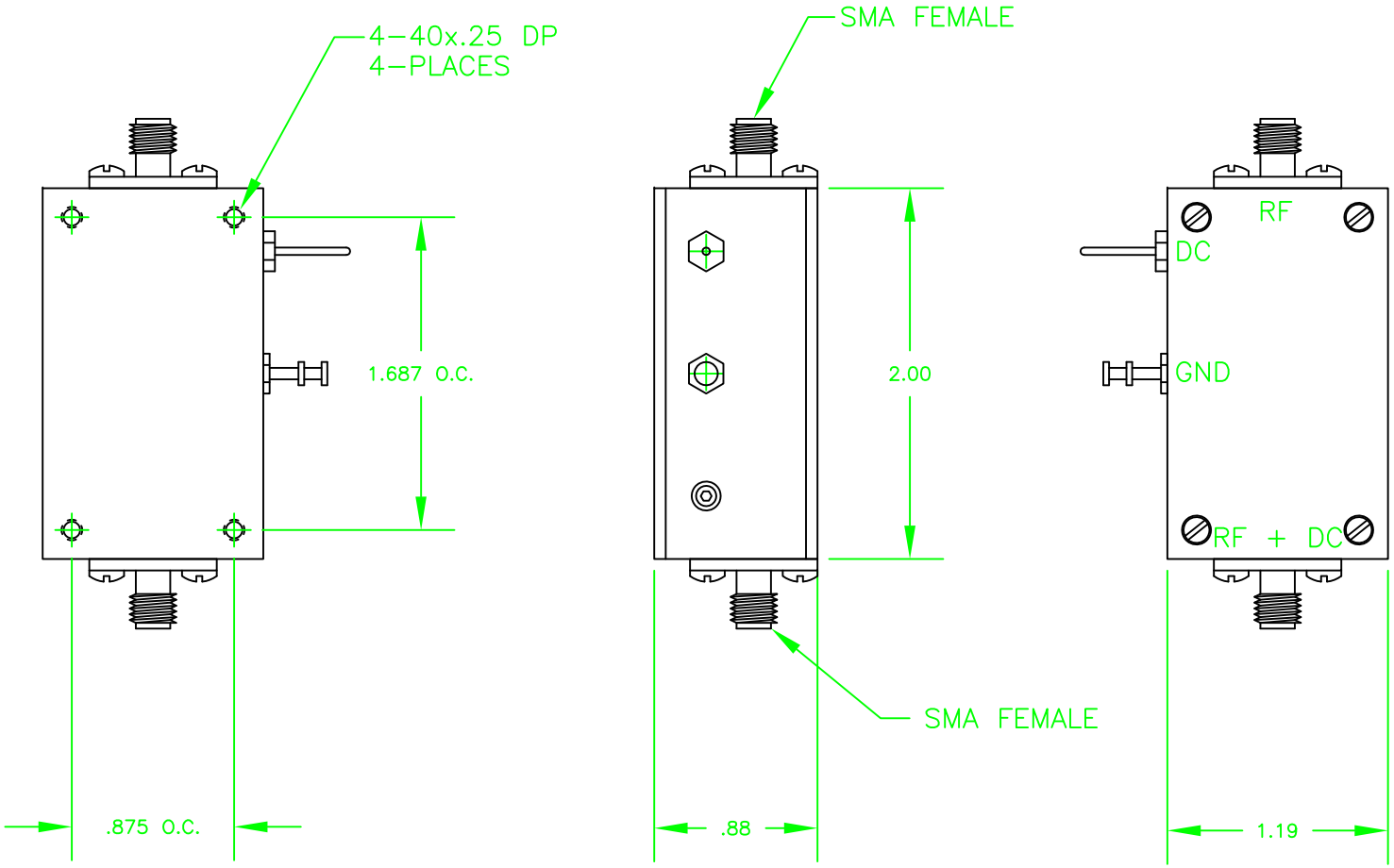

REV	ECN	DATE	BY	APPR
–	ISSUED	12-21-12	DTS	TRS

JFW INDUSTRIES, INC.

www.jfwindustries.com PH: 317-887-1340

MATERIAL	BRASS		PROPRIETARY INFORMATION
FINISH	NICKEL		ALL SURFACES ARE TO BE FREE OF BURRS, PITS, & SCRATCHES
MODEL	50BT-XXX	SCALE FULL	TOLERANCES .XX±.010 .XXX±.005 XX°±.5°
DESCRIPTION	BIAS TAP		DWG # 092-7559