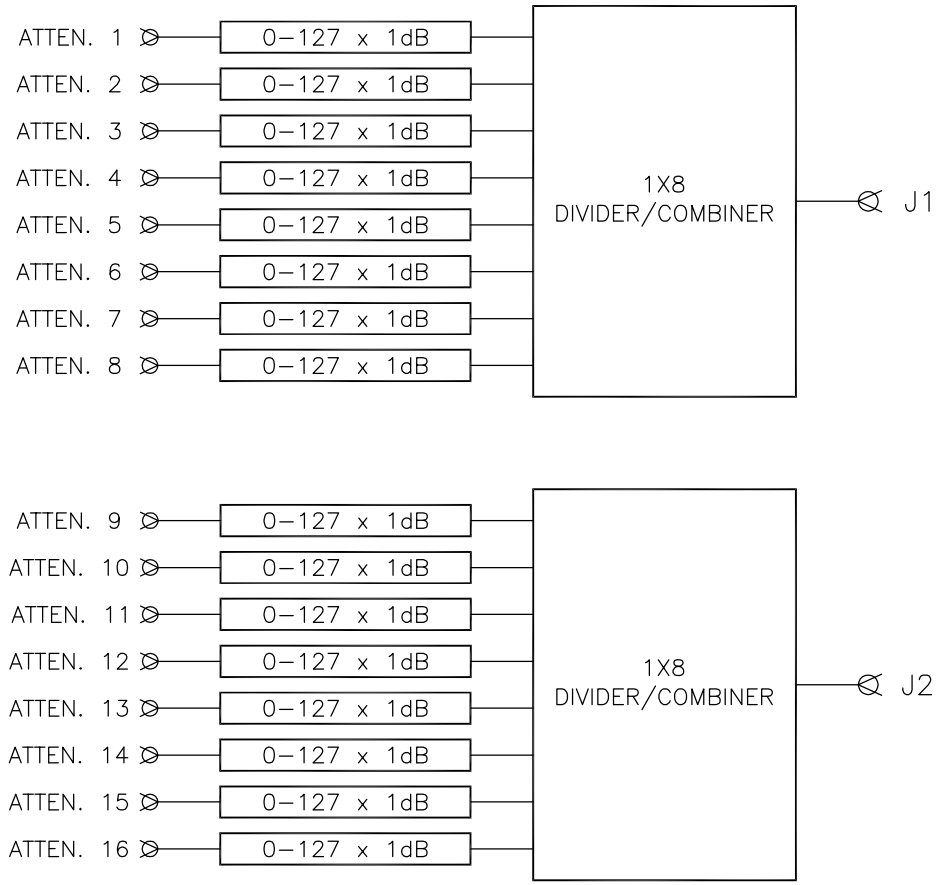

REV	ECN	DATE	BY	APPR
–	ISSUED	4–2–13	JZ	TEZ

JFW INDUSTRIES, INC.

www.jfwindustries.com PH: 317–887–1340

MATERIAL

PROPRIETARY INFORMATION

FINISH

ALL SURFACES ARE TO BE FREE OF BURRS, PITS, & SCRATCHES

MODEL 50PA–XXX

SCALE

TOLERANCES .XX±.010 .XXX±.005 XX°±.5°

DESCRIPTION

BLOCK DIAGRAM FOR DUAL 8x1 LC HANDOVER SYSYTEM

DWG # 092–7666