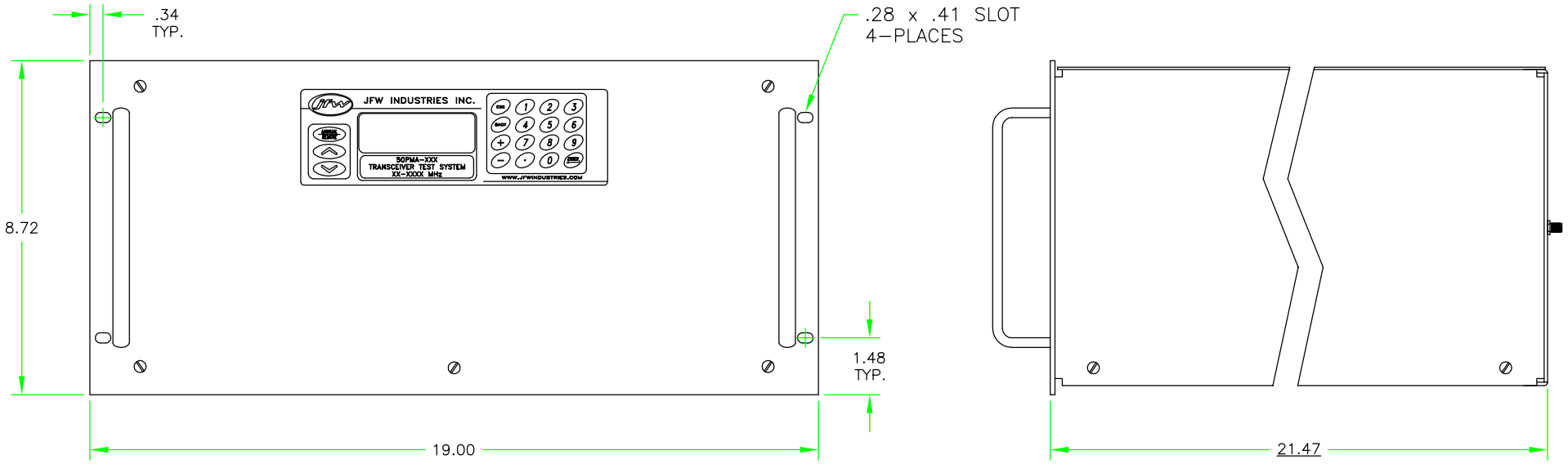

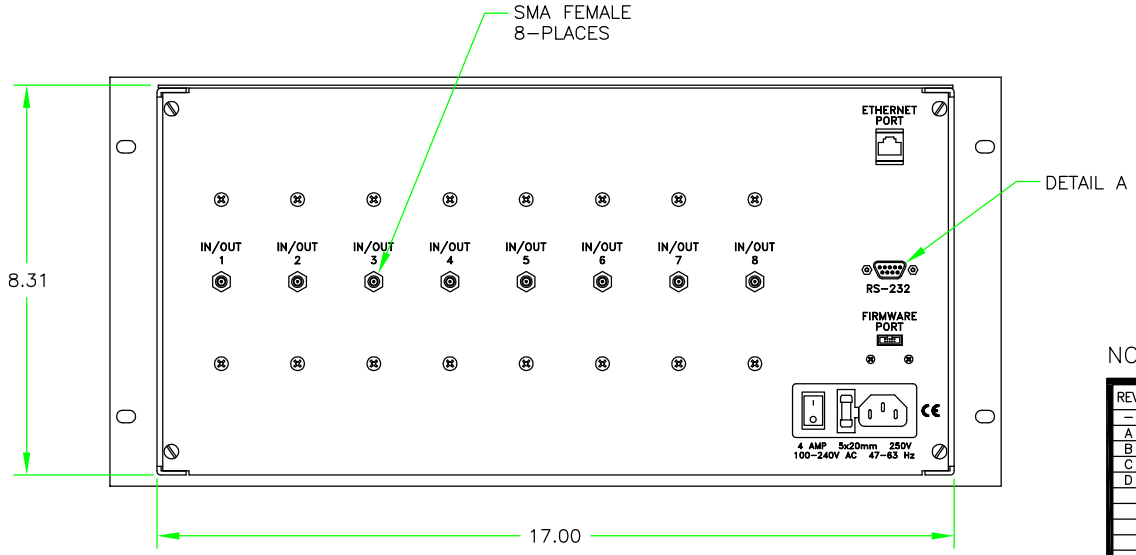

REAR VIEW

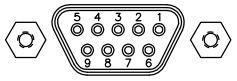

DETAIL A
DE–9S

PIN	FUNCTION
1	CHASSIS GROUND
2	RECEIVED DATA
3	TRANSMITTED DATA
4	NO CONNECTION
5	SIGNAL GROUND
6	NO CONNECTION
7	NO CONNECTION
8	NO CONNECTION
9	NO CONNECTION

NOTE: SEE JFW# 092–5910 FOR BLOCK DIAGRAM

REV	ECN	DATE	BY	APPR
–	ISSUED	7–23–10	BZ	TEZ
A	19765	2–25–11	BZ	TEZ
B	21326	2–29–12	JZ	BZ
C	21593	5–30–12	JZ	TEZ
D	24240	6–30–14	BZ	CLK

JFW INDUSTRIES, INC.
www.jfwindustries.com PH: 317–887–1340

MATERIAL: ALUMINUM ALLOY		PROPRIETARY INFORMATION
FINISH: CHEMFILM TCP / FRONT: BLACK		ALL SURFACES ARE TO BE FREE OF BURRS, PITS, & SCRATCHES
MODEL: 50PMA–XXX	SCALE: 3/8	TOLERANCES .XX±.010 .XXX±.005 XX°±.5°
DESCRIPTION: TRANSCEIVER TEST SYSTEM		DWG #: 092–6641