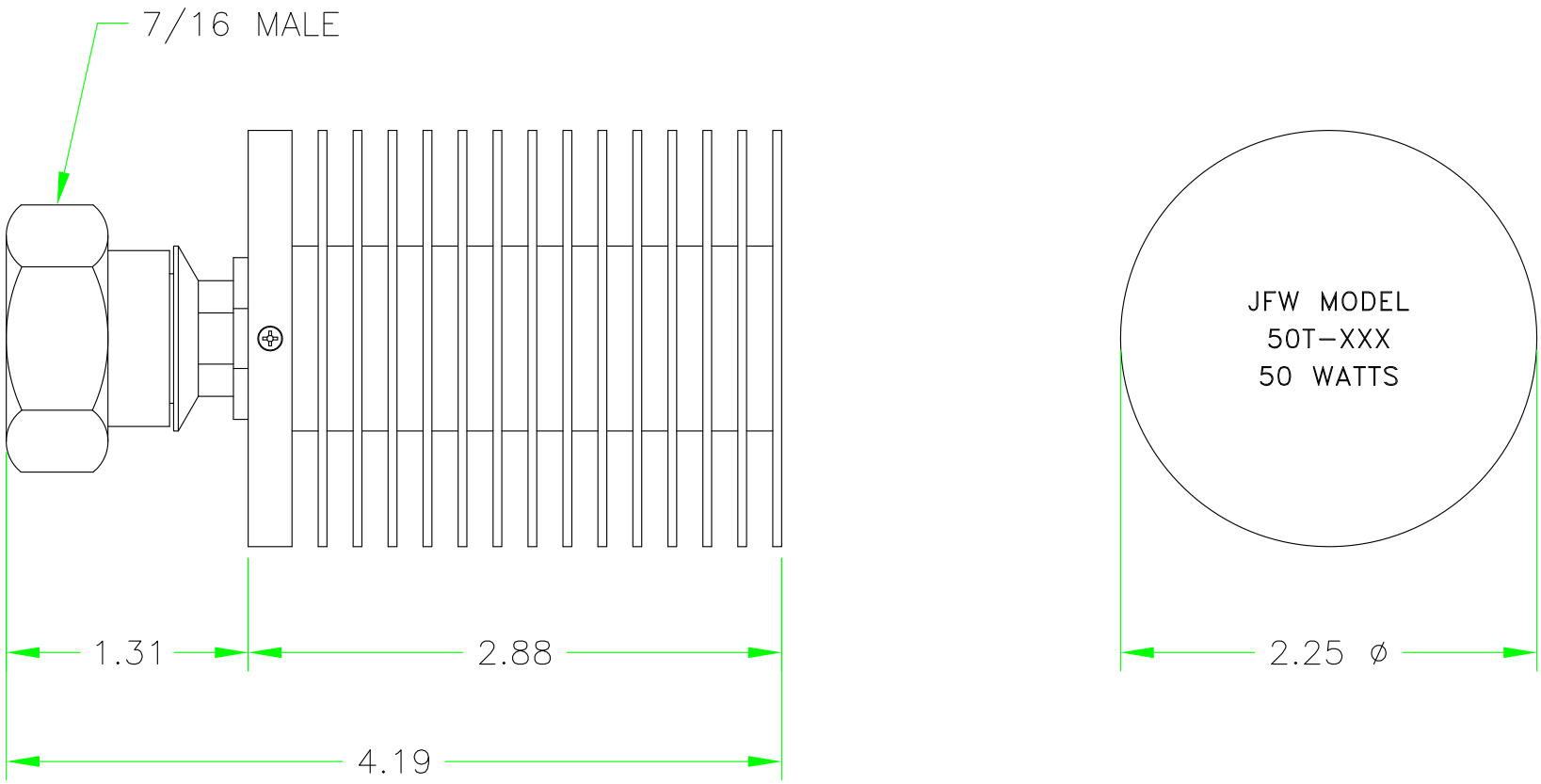

REV	ECN	DATE	BY	APPR
–	ISSUED	10-4-12	JZ	TEZ

JFW INDUSTRIES, INC.

www.jfwindustries.com PH: 317-887-1340

MATERIAL	HEATSINK: ALUM. ALLOY/CONN: BRASS	PROPRIETARY INFORMATION
FINISH	HEATSINK: BLACK ANODIZE/CONN: NICKEL	ALL SURFACES ARE TO BE FREE OF BURRS, PITS, & SCRATCHES
MODEL	50T-XXX	SCALE FULL
		TOLERANCES .XX±.010 .XXX±.005 XX°±.5°
DESCRIPTION	TERMINATION	DWG # 092-7479