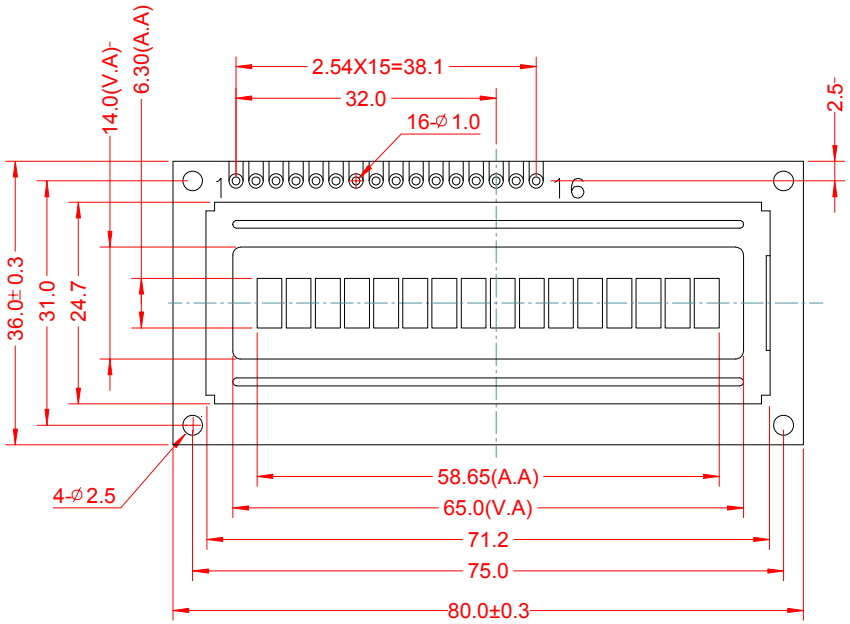

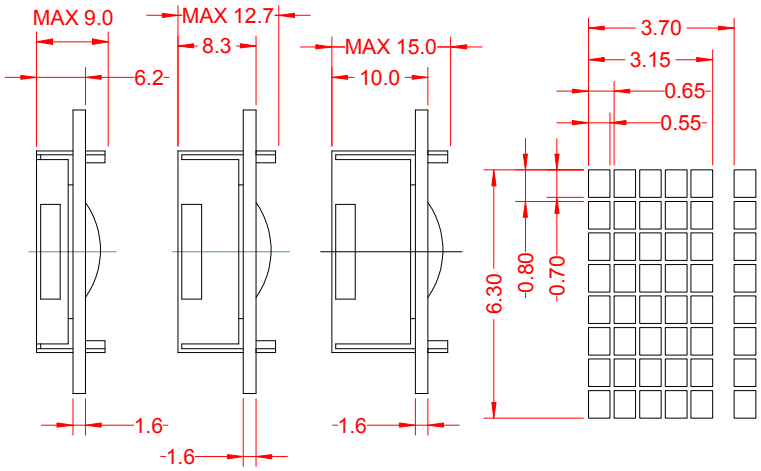

WITH EL B/L OR WITHOUT B/L

WITH LED B/L

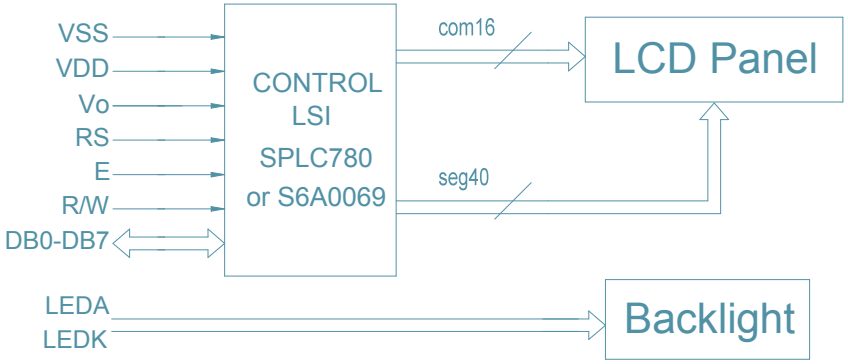

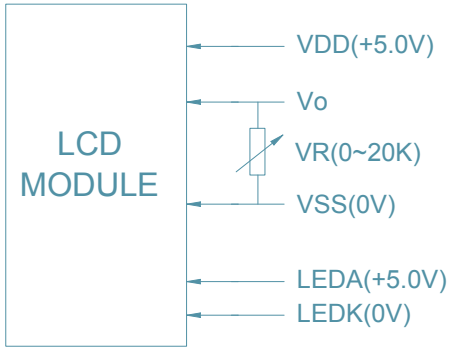

Pin No	Symbol	Pin No	Symbol
1	VSS	9	DB2
2	VDD	10	DB3
3	Vo	11	DB4
4	RS	12	DB5
5	R/W	13	DB6
6	E	14	DB7
7	DB0	15	LEDA
8	DB1	16	LEDK

Information contained herein is proprietary to Liquid Crystal Technologies and may not be used or disclosed without the permission of Liquid Crystal Technologies

LCT
24300 Solon Rd.
Solon, OH 44146
(440) 232-8590

CUSTOMER: Liquid Crystal Technologies

PART NUMBER: LCTCB016001A

DRAWING: LCTCB016001A.dwg

REV: A

NOT TO SCALE

UNLESS OTHERWISE SPECIFIED:
DIMENSIONS ARE IN MM
DECIMAL TOL: +/- .03
ANGULAR TOL: +/- 1°

FLUID | VIEWING MODE
SCALE | POLARIZER TYPE
VIEWING DIRECTION

DRAWN: CO | DATE: 11/30/07 | SHEET: 1 OF 1

REVISIONS