ON-LINE POWER PROPRIETARY
CONFIDENTIAL INFORMATION

REVISION				
REV	ECO	DESCRIPTION	DATE	APPROVED
X1		PRELIMINARY	2/23/16	HN

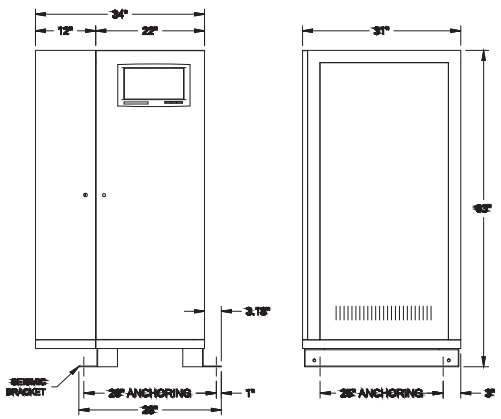

FRONT

SIDE

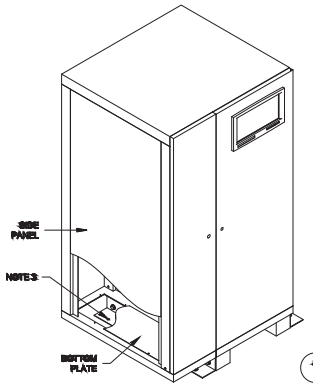

ISO FRONT LEFT

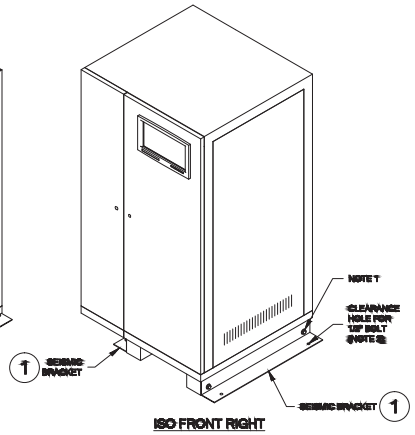

ISO FRONT RIGHT

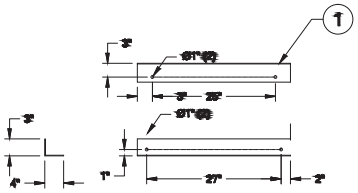

MATERIAL: 12GA STEEL
FINISH: POWDER COAT POWDER GRAY, SMOOTH TEXTURE.

MAXIMUM WEIGHT: 2500 LBS
INVERTER CABINET
(10KVA THRU 60 KVA)

NOTES:

1. ASSEMBLE SEISMIC BRACKETS TO CABINET USING SUPPLIED 1/2-13 HEX BOLT, PRIOR TO SECURING CABINET TO FINAL LOCATION.
2. INDICATED MOUNTING HARDWARE TO BE SUPPLIED BY CUSTOMER. REFER TO LOCAL CODES FOR BOLT TYPE AND LENGTH.
3. IF NECESSARY, REMOVE SIDE PANEL AND REMOVE BOTTOM PLATE TO GAIN ACCESS AS SHOWN IN THE ISO FRONT LEFT VIEW.

THIS DRAWING IS PROPRIETARY, CONFIDENTIAL AND IS NOT TO BE COPIED, REPRODUCED, TRANSMITTED, DISCLOSED, PERFORMED OR USED IN ANY WAY WITHOUT WRITTEN PERMISSION.		On-Line POWER	COMMERCE, CA
DRWN: HN 02/17/16	2/23/16	TITLE: SEISMIC BRK INSTALLATION	
CHKD: 02/17/16	2/23/16	SIZE: B / DWG: 660T-277	REV: X1
APPROVAL: 02/17/16	2/23/16	SCALE:	WT: 2500 LBS / SHT 1 OF 1
SPECIFICATIONS SUBJECT TO CHANGE WITHOUT NOTICE			

NOTES:

1. DESIGNED PER THE 2012 IBC / 2013 CBC / 2014 LABC,
   Fa = 1.0 & Ss = 2.2
2. STORAGE CAPACITY: **2,500#** MAX. WEIGHT.
3. ANCHORS: HILTI KWIK BOLT TZ, ICC **#ESR-1917**, LARR **#25701**
4. CONCRETE: **5"** THICK x **2,500** PSI.
5. SOIL BEARING PRESSURE: **500** PSF. (MIN. REQ'D).
6. EVALUATION BASED ON NORTHRIDGE LOCATION
   (ONE OF THE HIGHEST LA FAULT AREA)
   WITH THE FOLLOWING CALCULATION AS A TYPICAL EXAMPLE.
   (ASSUMED GROUND FLOOR INSTALLATION)

LOADS & DISTRIBUTION: INVERTER CABINET

ANALYSIS BASED ON SECTION 13.3 OF THE ASCE 7-10 SPECIFICATION
REFERENCED IN CHAPTER 16 OF THE 2012 IBC/2013 CBC/2014 LABC

Fp (13.3-1)= 0.4 x ap x S_{DS} x Wp/ [Rp/ Ip]	0.235 x Wp	
Fp (13.3-2)= 1.6 x S_{DS} x Ip x Wp	2.352 x Wp	SHALL NOT BE GREATER THAN
Fp (13.3-3)= 0.3 x S_{DS} x Ip x Wp	0.441 x Wp	SHALL NOT BE LESS THAN

SITE CLASS = D
Fa = **1**
Ss = **2.2**
S_{DS} = 1.47
Ip = 1.00
Rp = 2.5 ASCE 7-10 Table 13.5-1
ap = 1 ASCE 7-10 Table 13.5-1

Wp = **2500 LB**

0.7Fp = 0.7*0.441*Wp
= 0.31*2500 LB
= 772 LB

OVERTURNING ANALYSIS:

CABINET HEIGHT, Ht = 63.0 IN
ANCHORS SPACING, D = 26.0 IN

Mot = Vtotal*(1/2 Ht)
= 772 LB * 63 IN * 1/2
= 24,310 IN-LB

Mst = Wp*D/2
= 2500 LB * 26 IN/2
= 32,500 IN-LB

Puplift = (Mot - 0.6*Mst)/D
= (24310 IN-LB - 0.6 * 32500 IN-LB)/26 IN
= 185 LB <= UPLIFT

ANCHORS
ALLOWABLE CAPACITY PER ICC REPORT AND ACI APPENDIX-D
PULLOUT : 830 LB $T_{allowable, ASD}$
SHEAR : 900 LB $V_{allowable, ASD}$

COMBINED STRESS = (185 LB/1660 LB) + (772 LB/3600 LB)
= 0.33 < 1.2 OK

USE 1/2"Ø x 2-1/2" MIN. EMBED. HILTI KB-TZ, ICC ESR-1917 (LARR #25701) OR APPROVED EQUAL
(4) TOTAL PER CABINET, (2) PER SEISMIC BRACKET

ADDRESS:
POWER COMPANY
9301 TAMPA AVE
NORTHRIDGE, CA 91324

REV.	DATE	BY	DESCRIPTION

SEIZMIC
EST. 1985
SEIZMIC ENGINEERING, INC.
161 Atlantic Street
Pomona, California 91768
Tel.(909)869-0989
Fax (909)869-0981

DRAWN BY:	M.V. / T.C.
DATE:	01/13/16
LAST REV. BY:	
REV. DATE:	
TYPE:	OL
SCALE:	N.T.S.
APRV'D BY:	SAL E. FATEEN

REGISTERED PROFESSIONAL ENGINEER
SAL E. FATEEN
No. 25969
CIVIL
STATE OF CALIFORNIA
EXPIRES
12-31-2017

DESCRIPTION:
CABINET DETAILS

DRAWING NUMBER:
15-2197-C

SOLAR POWER PROPRIETARY
CONFIDENTIAL INFORMATION

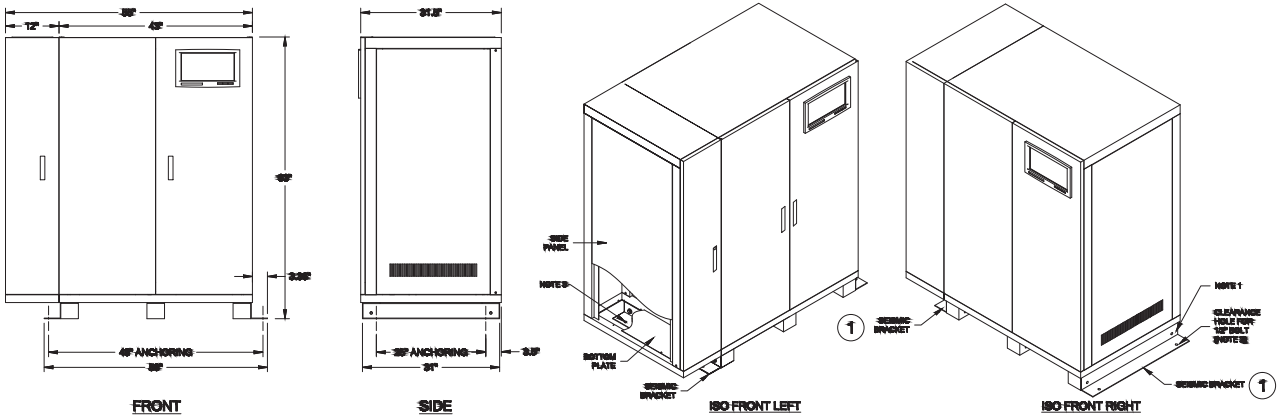

FRONT

SIDE

ISO FRONT LEFT

ISO FRONT RIGHT

MAXIMUM WEIGHT: 4000 LBS
INVERTER CABINET
(80KVA THRU 160 KVA)

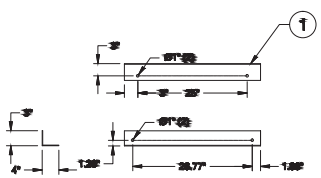

MATERIAL: 10 GAUGE STEEL
FINISH: PRIME & PAINT COLOR BLACK, SMOOTH TEXTURE.

NOTES:

1. ASSEMBLE SEISMIC BRACKETS TO CABINET USING SUPPLIED 1/2-13 HEX BOLT. PRIOR TO SECURING CABINET TO FINAL LOCATION.
2. INDICATED MOUNTING HARDWARE TO BE SUPPLIED BY CUSTOMER. REFER TO LOCAL CODES FOR BOLT TYPE AND LENGTH.
3. IF NECESSARY, REMOVE SIDE PANEL AND REMOVE BOTTOM PLATE TO GAIN ACCESS AS SHOWN IN THE ISO FRONT LEFT VIEW.

SIZE	DWG:	REV
B	600T-277	XT
SCALE:	SHT. WT: 4000 LBS	SHT 2 OF 2

NOTES:

1. DESIGNED PER THE 2012 IBC / 2013 CBC / 2014 LABC, Fa = 1.0 & Ss = 2.2
2. STORAGE CAPACITY: **4,000#** MAX. WEIGHT.
3. ANCHORS: HILTI KWIK BOLT TZ, ICC **#ESR-1917**, LARR **#25701**
4. CONCRETE: **5"** THICK x **2,500** PSI.
5. SOIL BEARING PRESSURE: **500** PSF. (MIN. REQ'D).
6. EVALUATION BASED ON NORTHRIDGE LOCATION (ONE OF THE HIGHEST LA FAULT AREA) WITH THE FOLLOWING CALCULATION AS A TYPICAL EXAMPLE. (ASSUMED GROUND FLOOR INSTALLATION)

LOADS & DISTRIBUTION: INVERTER CABINET

ANALYSIS BASED ON SECTION 13.3 OF THE ASCE 7-10 SPECIFICATION
REFERENCED IN CHAPTER 16 OF THE 2012 IBC/2013 CBC/2014 LABC

Fp (13.3-1)= 0.4 x ap x S_{DS} x Wp/ [Rp/ Ip]	0.235 x Wp	
Fp (13.3-2)= 1.6 x S_{DS} x Ip x Wp	2.352 x Wp	SHALL NOT BE GREATER THAN
Fp (13.3-3)= 0.3 x S_{DS} x Ip x Wp	0.441 x Wp	SHALL NOT BE LESS THAN

SITE CLASS = D
Fa = **1**
Ss = **2.2**
S_{DS} = 1.47
Ip = 1.00
Rp = 2.5 ASCE 7-10 Table 13.5-1
ap = 1 ASCE 7-10 Table 13.5-1

Wp = **4000 LB**

0.7Fp = 0.7*0.441*Wp
= 0.31*4000 LB
= 1,235 LB

OVERTURNING ANALYSIS:

CABINET HEIGHT, Ht = 63.0 IN
ANCHORS SPACING, D = 26.0 IN

Mot = Vtotal*(1/2 Ht)
= 1235 LB * 63 IN * 1/2
= 38,896 IN-LB

Mst = Wp*D/2
= 4000 LB * 26 IN/2
= 52,000 IN-LB

Puplift = (Mot - 0.6*Mst)/D
= (38896 IN-LB - 0.6 * 52000 IN-LB)/26 IN
= 296 LB <= UPLIFT

ANCHORS
ALLOWABLE CAPACITY PER ICC REPORT AND ACI APPENDIX-D
PULLOUT : 830 LB $T_{allowable, ASD}$
SHEAR : 900 LB $V_{allowable, ASD}$

COMBINED STRESS = (296 LB/1660 LB) + (1235 LB/3600 LB)
= 0.52 < 1.2 OK

USE 1/2"Ø x 2-1/2"MIN. EMBED. HILTI KB-TZ, ICC ESR-1917 (LARR #25701) OR APPROVED EQUAL
(4) TOTAL PER CABINET, (2) PER SEISMIC BRACKET

ADDRESS:
POWER COMPANY
9300 TAMPA AVE
NORTHRIDGE, CA 91324

REV.	DATE	BY	DESCRIPTION

SEIZMIC
EST. 1985
SEIZMIC ENGINEERING, INC.
161 Atlantic Street
Pomona, California 91768
Tel.(909)869-0989
Fax (909)869-0981

DRAWN BY:	M.V. / T.C.
DATE:	01/13/16
LAST REV. BY:	
REV. DATE:	
TYPE:	OL
SCALE:	N.T.S.
APPV'D BY:	SAL E. FATBEN

REGISTERED PROFESSIONAL ENGINEER
SAL E. FATBEN
No. 25969
CIVIL
STATE OF CALIFORNIA
EXPIRES
12-31-2017

DESCRIPTION:
CABINET DETAILS

DRAWING NUMBER:
15-2197-D