RIGEL ENGINEERING
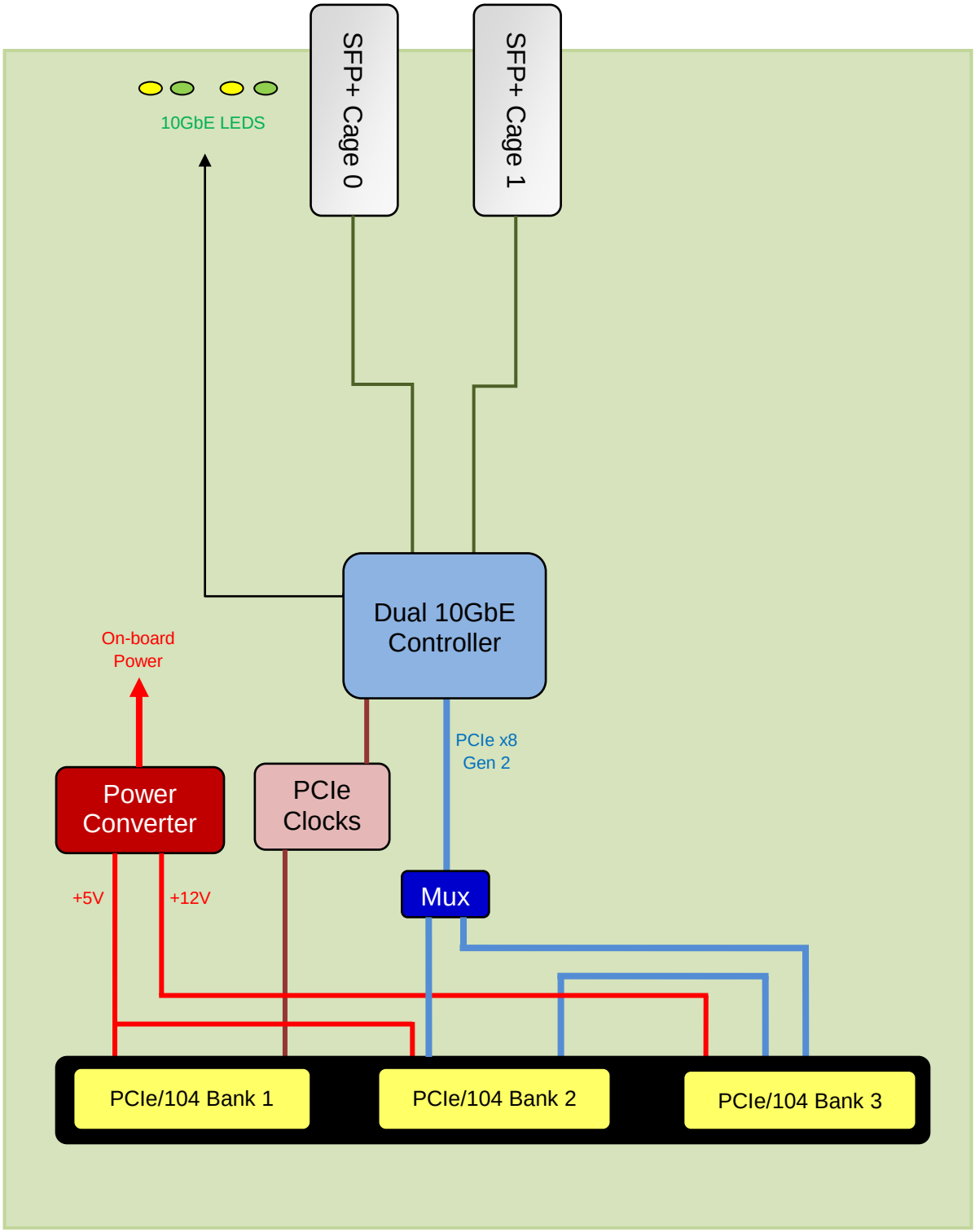
Model PC5002