No	NAME
1	YU
2	XL
3	YD
4	XR
5	GND1
6	IOVCC
7	VCC
8	FMARK
9	CS
10	RS
11	WR
12	RD
13	DB0
14	DB1
15	DB2
16	DB3
17	DB4
18	DB5
19	DB6
20	DB7
21	DB8
22	DB9
23	DB10
24	DB11
25	DB12
26	DB13
27	DB14
28	DB15
29	DB16
30	DB17
31	IM1
32	IM0
33	ID
34	RESET
35	GND
36	A
37	K1
38	K2
39	K3
40	K4

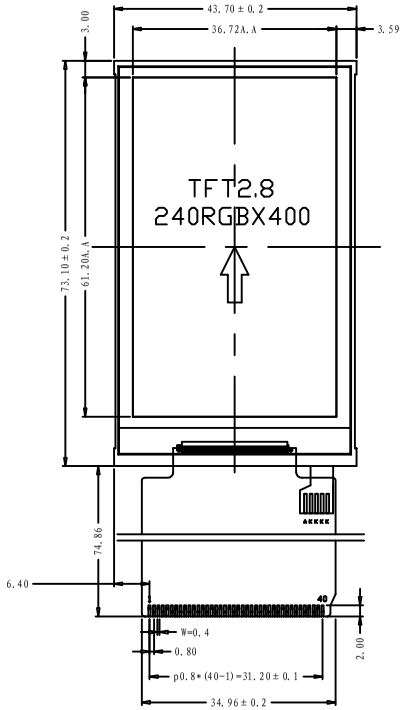

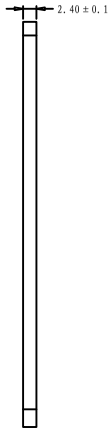

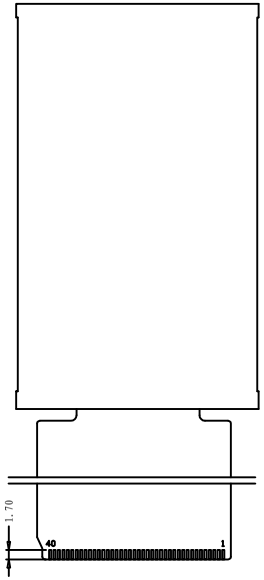

BL CIRCUIT DIAGRAM

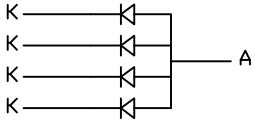

NOTE:

1. LCD TYPE: 2.8″ TFT
2. LCD IC: OTA4001
3. VIEING DIRECTION: 12 O'CLOCK
4. BACKLIGHT: 4 CHIPS WHITE LED
5. OPERATON TEMP: -20℃ ～70℃
6. STORAGE TEMP: -30℃ ～80℃
7. GENERA TOLERANCE: ±0.2

REV	Revision content description	Date
A	FIRST ISSUE	2013.05.16

深圳市如新电子有限公司

TOLERANCE(公差)		Mod.Name	PART.Name	
TOLERANCE UNLESS OTHERWISE SPECIFIED	X.X±0.3 X.XX±0.2	RX028A-03	LCM	
UNIT	DESIGNED(structure)	DESIGNED(electron)	APPROVED	DRAWING NAME
mm	JHJ			ASSEMBLE