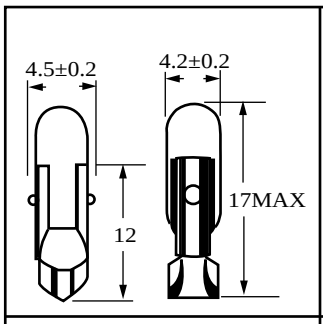


T-4.5
SLIDE BASE

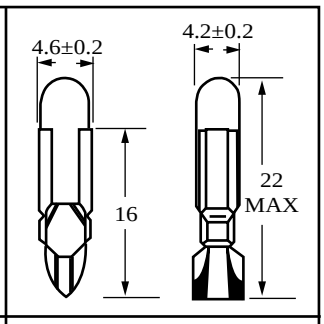


T-4.6
SLIDE BASE

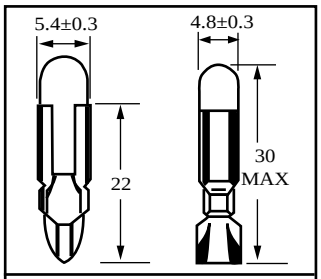


T-5.5
SLIDE BASE

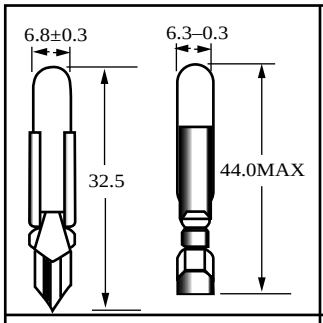


T-6.8F
SLIDE BASE

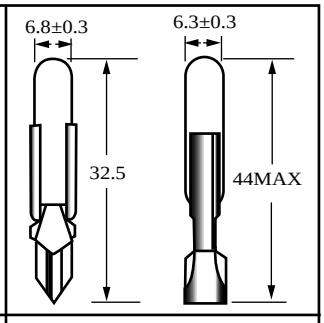


T-6.8G
SLIDE BASE

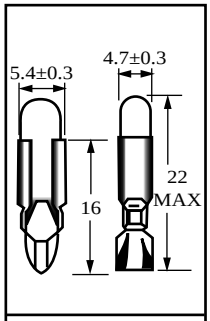


T-5.5K
SLIDE BASE

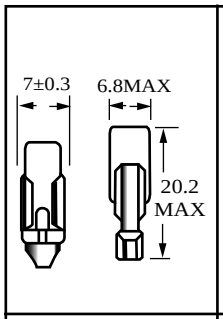


SLIDE
NO.6 BASE

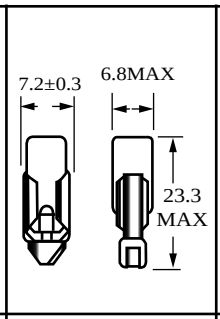


SLIDE
NO.6 BASE

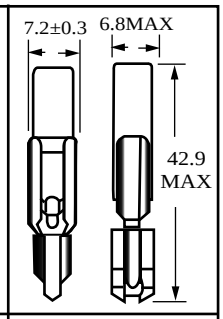


SLIDE
NO.3 BASE

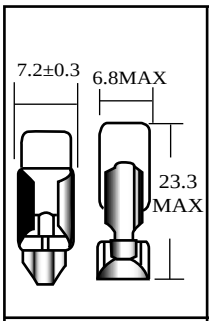


SLIDE
NO.5 BASE

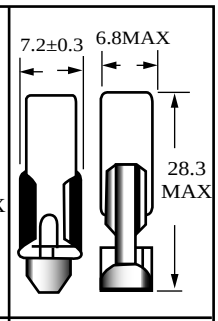


SLIDE
NO.5 BASE

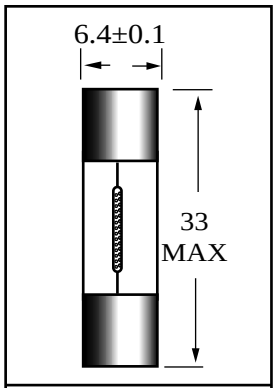


SF6/6
BASE

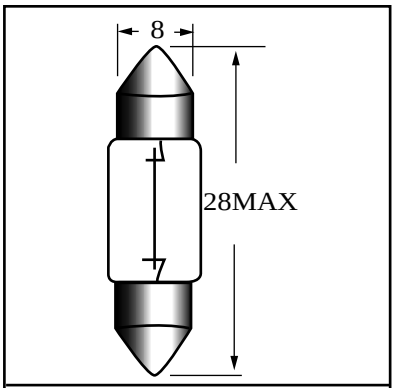


SV 7MM BASE

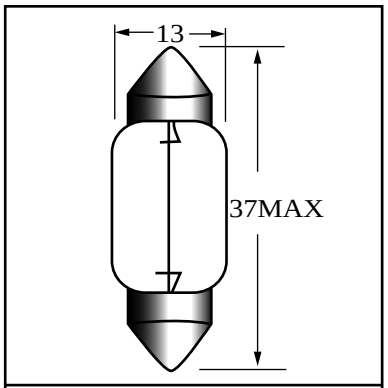


SV 7MM BASE