U.S.Electronics Inc.

USEDST-16CS3

SMDMAGNETIC TRANSDUCER

DIMENSIONS

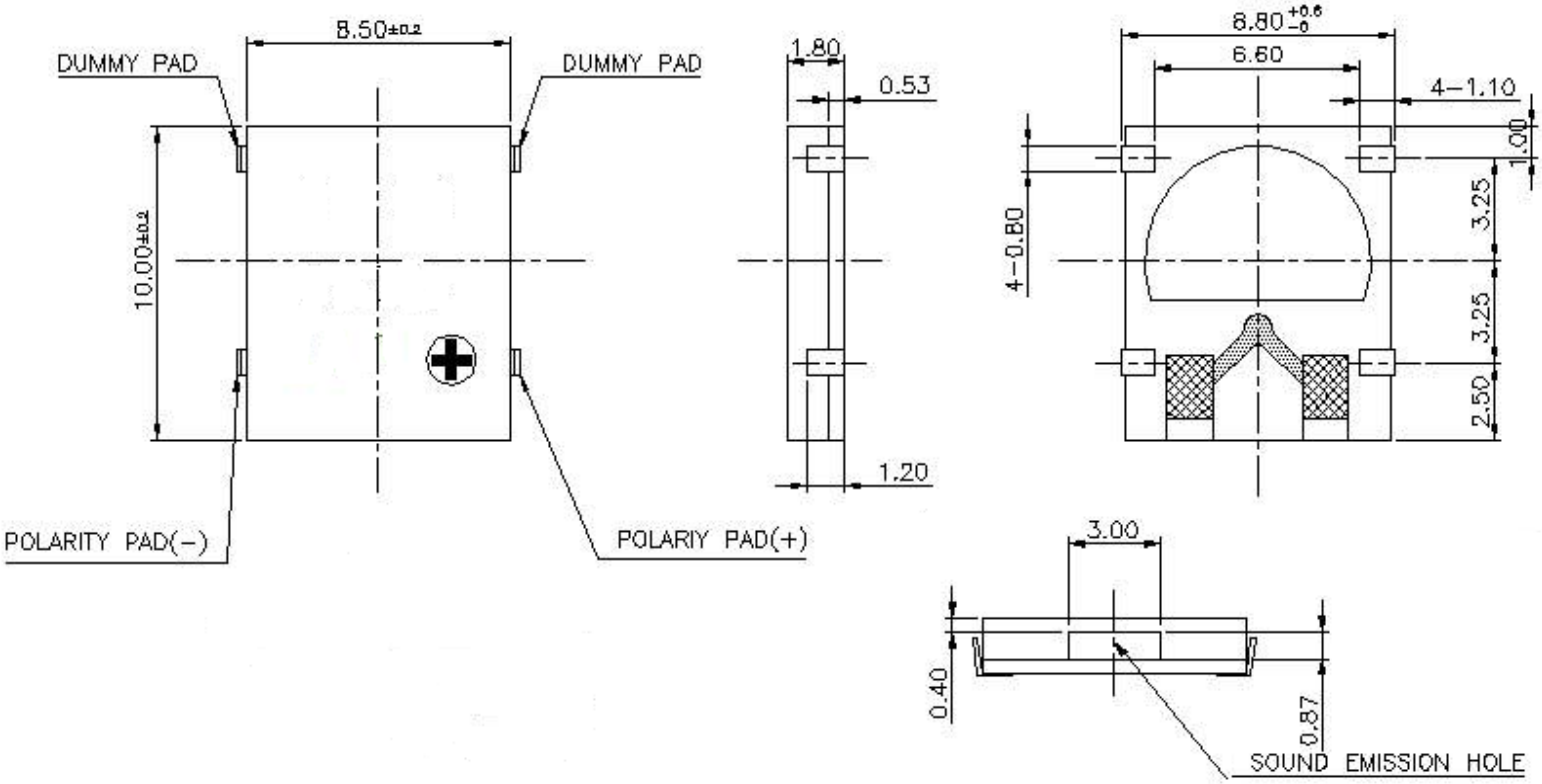

ELECTRICAL SPECIFICATIONS

MODEL NO.	USEDST-16CS3
OPERATING VOLTAGE RANGE (VDC)	2.0 – 5.0
RATED VOLTAGE (VDC)	3.6
**MAX. RATED CURRENT (mA)*	80
**MIN. SOUND OUTPUT (dBA/10 cm)*	88.0
**FREQUENCY (Hz)*	2670
TONE NATURE	SINGLE
TERMINAL	SMD
COIL RESISTENCE (ohms)	16 +/- 2.4
OPERATING TEMPERATURE (C)	-30 - +70
WEIGHT (g)	0.35

*Value applying at rated voltage

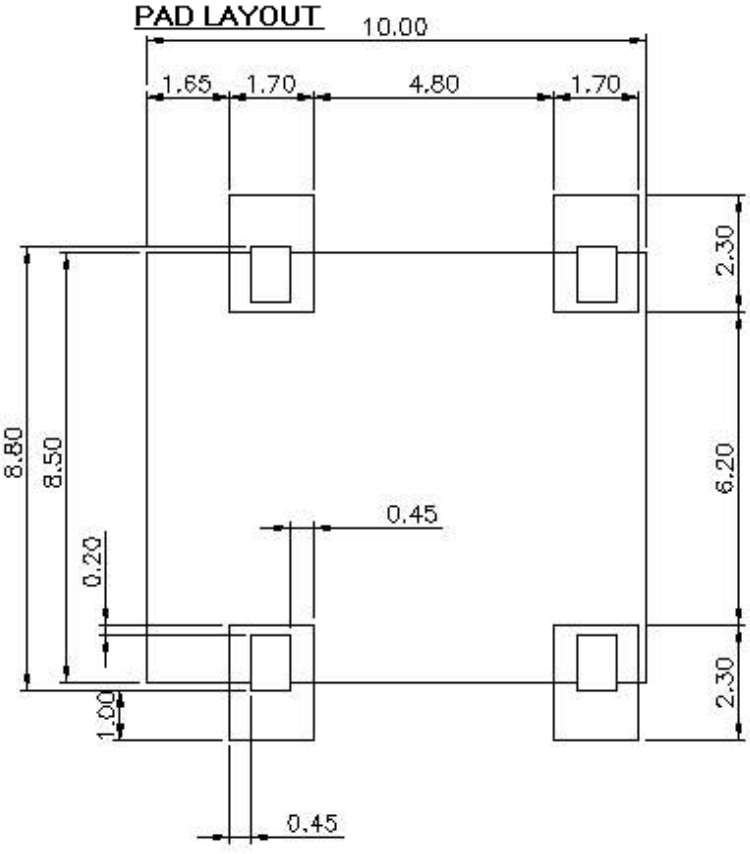

ST.LOUIS, MISSOURI. Phone : 314-423-7550