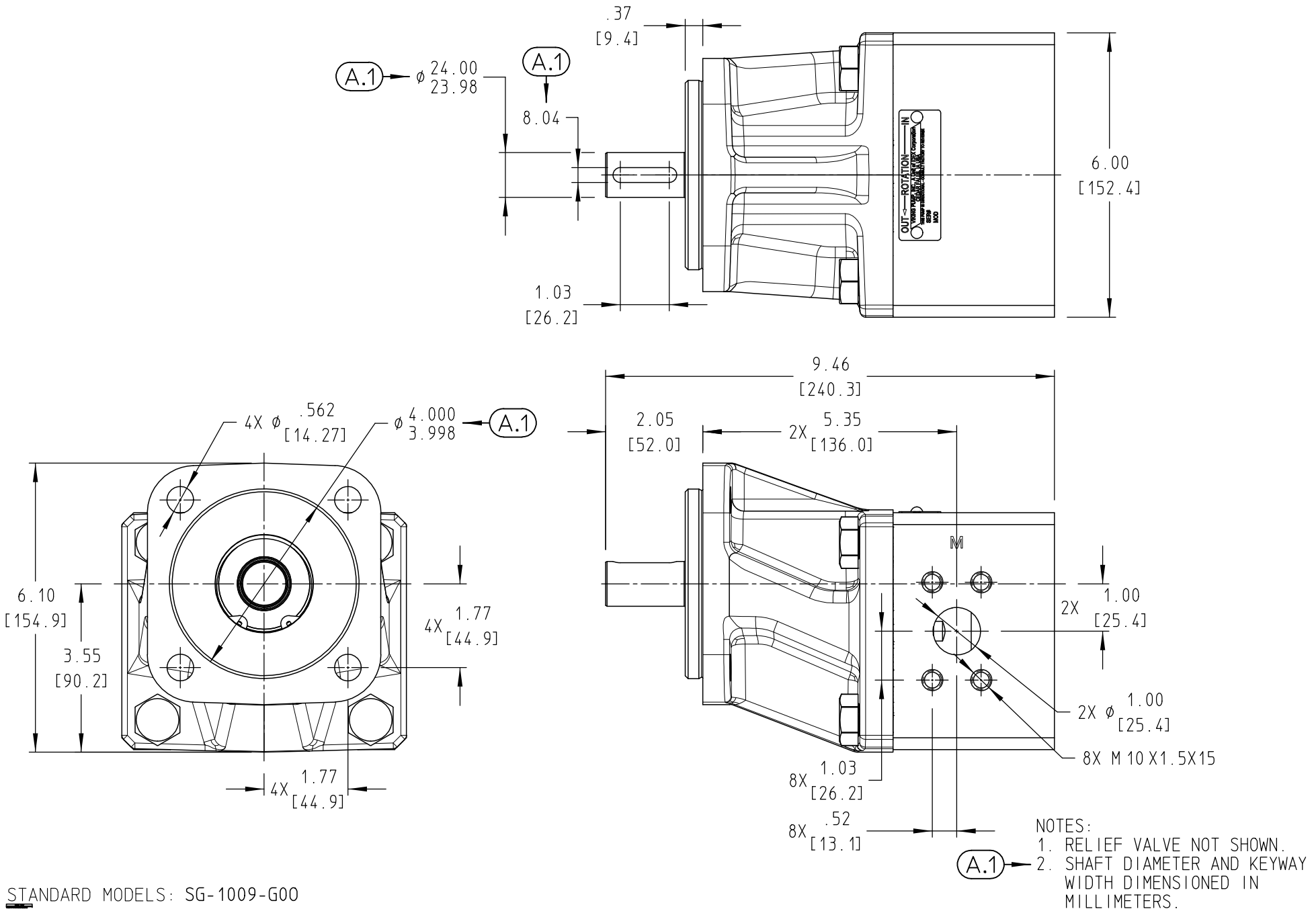

NOTES:
1. RELIEF VALVE NOT SHOWN.
2. SHAFT DIAMETER AND KEYWAY WIDTH DIMENSIONED IN MILLIMETERS.

STANDARD MODELS: SG-1009-G00

STATE	*RELEASED*	21 OCT 2009	DIMENSIONS ARE IN INCHES	VIKING PUMP	VIKING PUMP, INC. A Unit of IDEX Corporation Cedar Falls, Iowa 50613 U.S.A.	THIS DRAWING IS THE PROPERTY OF VIKING PUMP, INC. AND IS PROPRIETARY IN GENERAL AND DETAIL. IT SHALL NOT BE COPIED OR ITS CONTENTS REVEALED TO OUTSIDE PARTIES WITHOUT THE WRITTEN CONSENT OF VIKING PUMP, INC.	3D	DWG. NO. GPV-1009-001	SHEET 1 OF 1	REV. A.1
DRAWN	DUTCHER	19 AUG 2009	PROJECT D357						20 OCT 2009
CHECKED	VCI	02 SEP 2009	WAS						