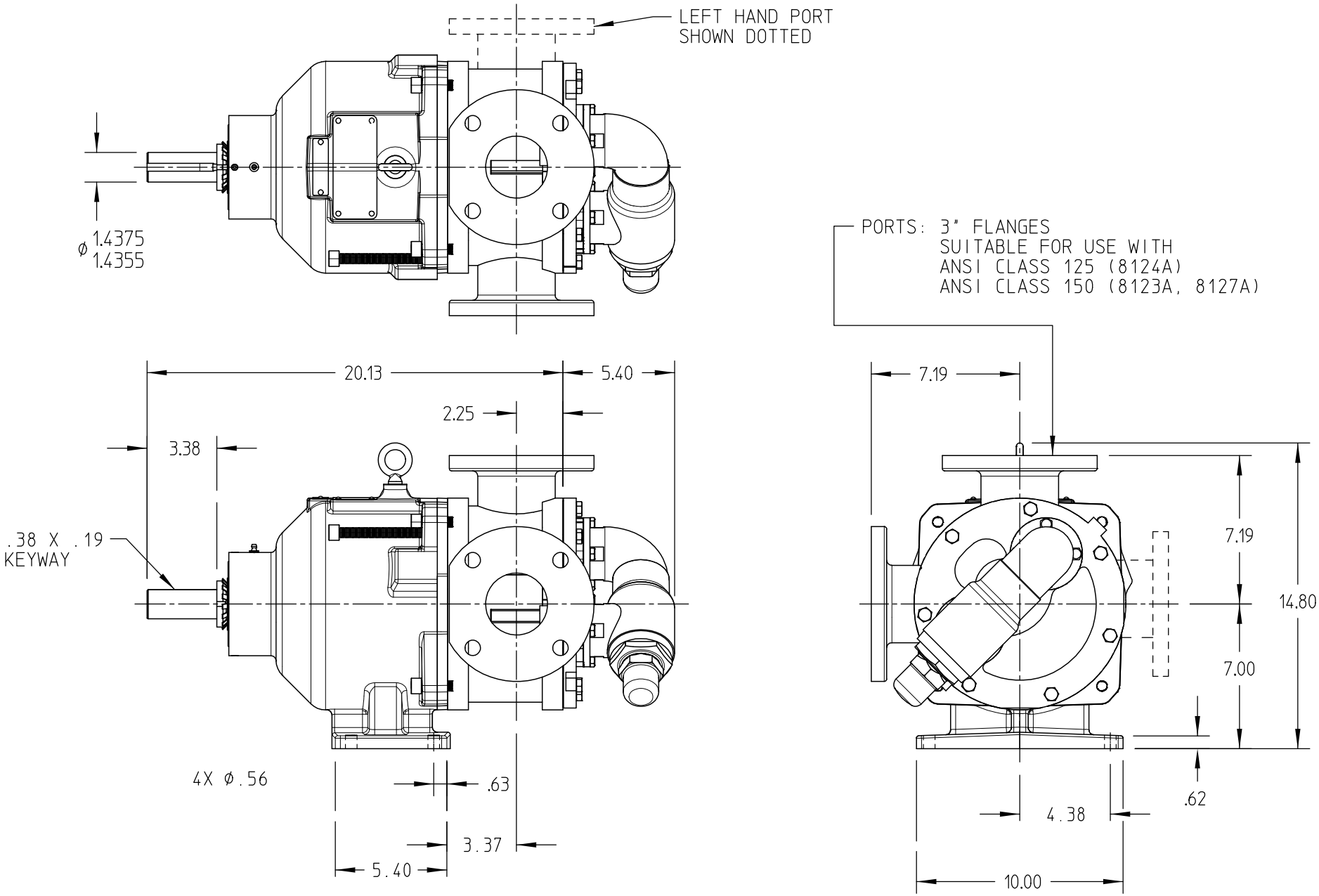

STANDARD MODELS: LL8124A, LL8123A, LL8127A

STATE	*RELEASED*	18 FEB 2010	DIMENSIONS ARE IN INCHES	VIKING PUMP, INC. A Unit of IDEX Corporation Cedar Falls, Iowa 50613 U.S.A.	THIS DRAWING IS THE PROPERTY OF VIKING PUMP, INC. AND IS PROPRIETARY IN GENERAL AND DETAIL. IT SHALL NOT BE COPIED OR ITS CONTENTS REVEALED TO OUTSIDE PARTIES WITHOUT THE WRITTEN CONSENT OF VIKING PUMP, INC.	3D	DWG. NO. LV-4036	SHEET 1 OF 1
DRAWN	KROGMANN	22 OCT 2007	PROJECT D215					REV. E
CHECKED	SMM	08 NOV 2007	WAS					9 DEC 2009