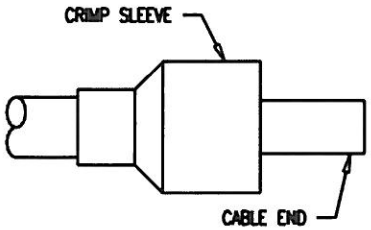

CUT CABLE END SQUARE AND SLIDE CRIMP SLEEVE OVER CABLE AS SHOWN.

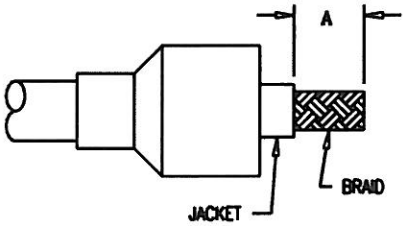

REMOVE JACKET TO "A" DIMENSION

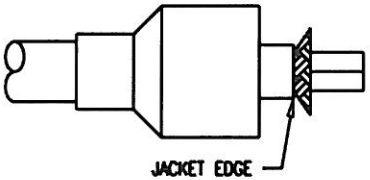

FLARE OR BULGE BACK BRAID AND TRIM WITH SCISSORS AT EDGE OF JACKET

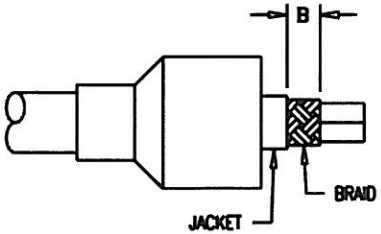

REMOVE JACKET TO "B" DIMENSION, TAKING CARE NOT TO NICK BRAID.

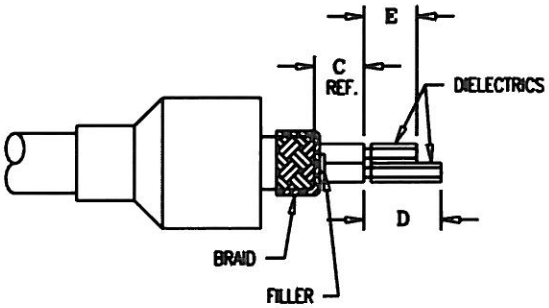

FOLD BACK BRAID AND TRIM BOTH FILLERS FLUSH WITH FOLD. THEN CUT THRU BOTH DIELECTRICS. AT "D" DIMENSION (DO NOT NICK CONDUCTORS AND DO NOT REMOVE DIELECTRICS). NEXT, TRIM ONE OF THE LEADS TO THE "E" DIMENSION, THE REMAINING LONG LEAD WILL BE INSERTED INTO THE CENTER CONTACT IN THE NEXT STEP.

DASH NO	A	B	C	D	E	UNITS
-1	.350	.375	.410	.315	.172	IN.
	8.9	9.5	10.4	8.0	4.4	mm

3-400 (SHEET 1 OF 2)

REVISIONS

ISSUE	CHANGES

SCALE 1:1

APPROX SURFACE AREA

USED ON

REF:

CABLING INSTRUCTIONS

DRAWN	JCA	DATE	05/26/92
DESIGN	JT	DATE	05/26/92
APPR.		DATE	

KINGS
ELECTRONICS CO., INC.
TUCKAHOE, NEW YORK 10707

3-400 (SHEET 1 OF 2)

MAY 2007 THIS DRAWING BECAME THE PROPERTY OF PROPERTY OF
WINCHESTER ELECTRONICS CORPORATION, WALLINGFORD, CT 06492

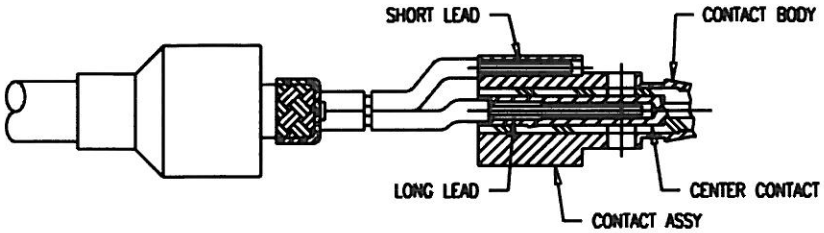

REMOVE THE DIELECTRICS AND INSERT CENTER CONDUCTORS (LONG LEAD IN CENTER, SHORT LEAD IN CONTACT BODY) INTO CONTACT ASSY. A GENTILE ROCKING MOTION OF THE CABLE WILL FACILITATE ENTRY OF THE LEADS.

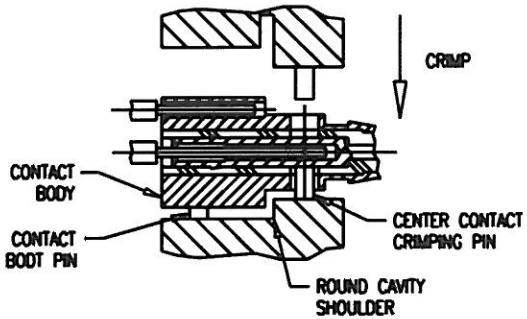

PLACE APPROPRIATE CRIMP DIE INTO CRIMPING TOOL. INSERT CONTACT ASSEMBLY, WITH CABLE CONDUCTORS IN PLACE, AGAINST THE ROUND DIE CAVITY SHOULDER. LINE UP CENTER CONTACT CRIMPING PINS WITH CLEARANCE HOLES (MAKE SURE THAT THE CONDUCTOR INSERTED IN THE CONTACT BODY IS IN LINE WITH THE CONTACT BODY PIN). CRIMP CAREFULLY.

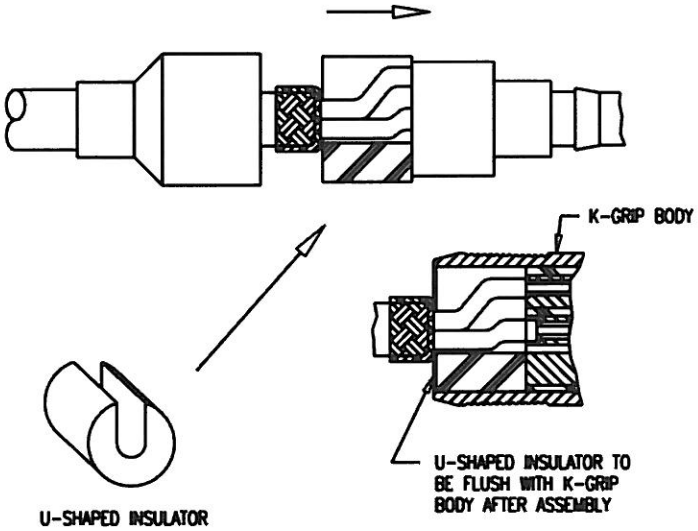

SLIDE U-SHAPED INSULATOR INTO GAP BETWEEN CONTACT ASSEMBLY AND BRAID. USING INSULATOR SNAP IN CONTACT ASSEMBLY INTO K-GRIP BODY.

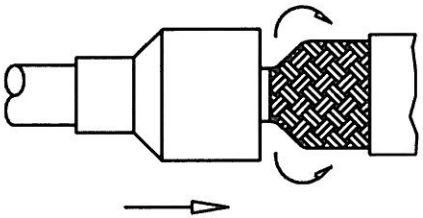

FOLD BRAID BACK OVER K-GRIP BODY, SLIDE CRIMP SLEEVE OVER BRAID AND BODY. CRIMP WITH HEX CAVITY OF DIE.

3-400 (SHEET 2 OF 2)

REVISIONS	
ISSUE	CHANGES

JCA2578

SCALE 1:1

APPROX SURFACE AREA

USED ON

REF:

CABLING INSTRUCTIONS

DRAWN	JCA	DATE	05/26/92
DESIGN	JT	DATE	05/26/92
APPR.		DATE	

KINGS
ELECTRONICS CO., INC.
TUCKAHOE, NEW YORK 10707

3-400 (SHEET 2 OF 2)

MAY 2007 THIS DRAWING BECAME THE PROPERTY OF PROPERTY OF
WINCHESTER ELECTRONICS CORPORATION, WALLINGFORD, CT 06492