INTERSIL

LM4250C
Programmable Operational Amplifier

FEATURES

- ±1V to ±18V power supply operation
- 3 nA input offset current
- Standby power consumption as low as 500 nW
- No frequency compensation required
- Programable electrical characteristics
- Offset Voltage nulling capability
- Can be powered by two flashlight batteries
- Short circuit protection

GENERAL DESCRIPTION

The 4250 is an extremely versatile programable monolithic operational amplifier. A single external master bias current setting resistor programs the input bias current, input offset current, quiescent power consumption, slew rate, input noise, and the gain-bandwidth product.

The 4250C is guaranteed over a 0°C to 70°C temperature range.

ORDERING INFORMATION

Dice	8 Pin Minidip	TO-99 Can
LM4250C/D	LM4250CN	LM4250CH

PIN CONFIGURATIONS

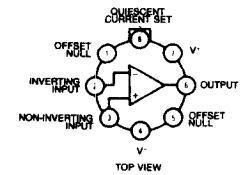

(outline dwg TO-99)

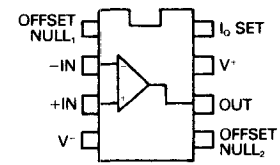

(outline dwg PA)

5

SCHEMATIC DIAGRAM

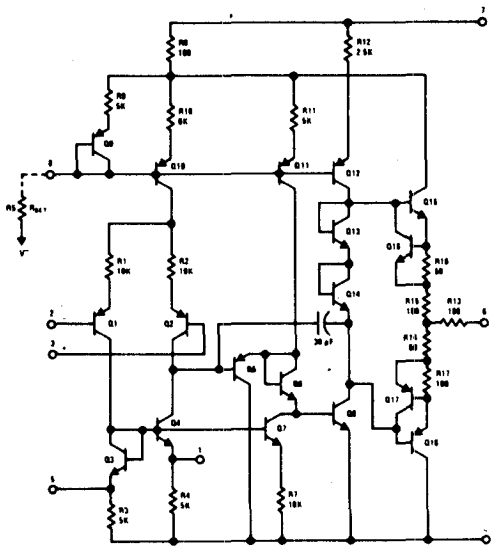

RESISTOR BIASING

Set Current Setting Resistor to V⁻

	I_{SET}				
V_S	0.1 μA	0.5 μA	1.0 μA	5 μA	10 μA
±1.5V	25.6 MΩ	5.04 MΩ	2.5 MΩ	492 kΩ	244 kΩ
±3.0V	55.6 MΩ	11.0 MΩ	5.5 MΩ	1.09 MΩ	544 kΩ
±6.0V	116 MΩ	23.0 MΩ	11.5 MΩ	2.29 MΩ	1.14 MΩ
±9.0V	176 MΩ	35.0 MΩ	17.5 MΩ	3.49 MΩ	1.74 MΩ
±12.0V	236 MΩ	47.0 MΩ	23.5 MΩ	4.69 MΩ	2.34 MΩ
±15.0V	296 MΩ	59.0 MΩ	29.5 MΩ	5.89 MΩ	2.94 MΩ

ABSOLUTE MAXIMUM RATINGS

Supply Voltage	±18V	Output Short Circuit Duration	Indefinite
Power Dissipation (Note 1)	500 mW	Operating Temperature Range	$0°C \leq T_A \leq 70°C$
Differential Input Voltage	±30V	Storage Temperature Range	−65°C to 150°C
Input Voltage (Note 2)	±15V	Lead Temperature (Soldering, 10 sec)	300°C
I_{SET} Current	150μA		

ELECTRICAL CHARACTERISTICS ($0°C \leq T_A \leq 70°C$ unless otherwise specified)

PARAMETERS	CONDITIONS	$V_S = \pm 1.5V$			
		$I_{SET} = 1\ \mu A$		$I_{SET} = 10\ \mu A$	
		MIN	MAX	MIN	MAX
V_{OS}	T_A 25 C $R_S \leq 100\ k\Omega$		5 mV		6 mV
I_{OS}	T_A 25 C		6 nA		20 nA
I_{bias}	$T_A = 25$ C		10 nA		75 nA
Large Signal Voltage Gain	$T_A = 25$ C $R_L = 100\ k\Omega$	25k			
	$V_O = \pm 0.6V$ $R_L = 10\ k\Omega$			25k	
Supply Current	$T_A = 25$ C		8 μA		90 μA
Power Consumption	$T_A = 25$ C		24 μW		270 μW
V_{OS}	$R_S \leq 10\ k\Omega$		6.5 mV		7.5 mV
I_{OS}			8 nA		25 nA
I_{bias}			10 nA		80 nA
Input Voltage Range		±0.6V		±0.6V	
Large Signal Voltage Gain	$V_O = \pm 0.6V$ $R_L = 100\ k\Omega$	25k			
	$R_L = 10\ k\Omega$			25k	
Output Voltage Swing	$R_L = 100\ k\Omega$	±0.6V			
	$R_L = 10\ k\Omega$			±0.6V	
Common Mode Rejection Ratio	$R_S \leq 10\ k\Omega$	70 dB		70 dB	
Supply Voltage Rejection Ratio	$R_S \leq 10\ k\Omega$	74 dB		74 dB	
Supply Current			8 μA		90 uA
Power Consumption			24 μW		270 uW

PARAMETERS	CONDITIONS	$V_S = \pm 15V$			
		$I_{SET} = 1\ \mu A$		$I_{SET} = 10\ \mu A$	
		MIN	MAX	MIN	MAX
V_{OS}	$T_A = 25°C$ $R_S \leq 100\ k\Omega$		5 mV		6 mV
I_{OS}	$T_A = 25$ C		6 nA		20 nA
I_{bias}	$T_A = 25$ C		10 nA		75 nA
Large Signal Voltage Gain	$T_A = 25°C$ $R_L = 100\ k\Omega$	60k			
	$V_O = \pm 10V$ $R_L = 10\ k\Omega$			60k	
Supply Current	$T_A = 25°C$		11 μA		100 μA
Power Consumption	$T_A = 25°C$		330 μW		3 mW
V_{OS}	$R_S \leq 10\ k\Omega$		6.5 mV		7.5 mV
I_{OS}			8 nA		25 nA
I_{bias}			10 nA		80 nA
Input Voltage Range		±13.5V		±13.5V	
Large Signal Voltage Gain	$V_O = \pm 10V$ $R_L = 100\ k\Omega$	50k			
	$R_L = 10\ k\Omega$			50k	
Output Voltage Swing	$R_L = 100\ k\Omega$	±12V			
	$R_L = 10\ k\Omega$			±12V	
Common Mode Rejection Ratio	$R_S \leq 10\ k\Omega$	70 dB		70 dB	
Supply Voltage Rejection Ratio	$R_S \leq 10\ k\Omega$	74 dB		74 dB	
Supply Current			11 uA		100 uA
Power Consumption			300 uW		3 mW