Advanced Power MOSFET

IRFW/I530A

FEATURES

- Avalanche Rugged Technology
- Rugged Gate Oxide Technology
- Lower Input Capacitance
- Improved Gate Charge
- Extended Safe Operating Area
- 175 °C Operating Temperature
- Lower Leakage Current : 10 μA (Max.) @ V_{DS} = 100V
- Lower $R_{DS(ON)}$: 0.092 Ω(Typ.)

BV_{DSS} = 100 V

$R_{DS(on)}$ = 0.11Ω

I_D = 14 A

D²-PAK **I²-PAK**

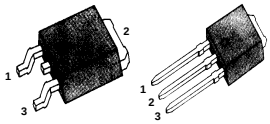

1. Gate 2. Drain 3. Source

Absolute Maximum Ratings

Symbol	Characteristic	Value	Units
V_{DSS}	Drain-to-Source Voltage	100	V
I_D	Continuous Drain Current (T_C=25 °C)	14	A
	Continuous Drain Current (T_C=100 °C)	9.9	
I_{DM}	Drain Current-Pulsed ①	56	A
V_{GS}	Gate-to-Source Voltage	± 20	V
E_{AS}	Single Pulsed Avalanche Energy ②	261	mJ
I_{AR}	Avalanche Current ①	14	A
E_{AR}	Repetitive Avalanche Energy ①	5.5	mJ
dv/dt	Peak Diode Recovery dv/dt ③	6.5	V/ns
P_D	Total Power Dissipation (T_A=25 °C) *	3.8	W
	Total Power Dissipation (T_C=25 °C)	55	W
	Linear Derating Factor	0.36	W/ °C
T_J , T_{STG}	Operating Junction and Storage Temperature Range	- 55 to +175	°C
T_L	Maximum Lead Temp. for Soldering Purposes, 1/8" from case for 5-seconds	300	

Thermal Resistance

Symbol	Characteristic	Typ.	Max.	Units
$R_{\theta JC}$	Junction-to-Case	--	2.74	°C/W
$R_{\theta JA}$	Junction-to-Ambient *	--	40	
$R_{\theta JA}$	Junction-to-Ambient	--	62.5	

* When mounted on the minimum pad size recommended (PCB Mount).

Rev. B

FAIRCHILD SEMICONDUCTOR™

©1999 Fairchild Semiconductor Corporation

Electrical Characteristics (T_C=25℃ unless otherwise specified)

Symbol	Characteristic	Min.	Typ.	Max.	Units	Test Condition
BV_{DSS}	Drain-Source Breakdown Voltage	100	--	--	V	V_{GS}=0V,I_D=250μA
$\Delta BV/\Delta T_J$	Breakdown Voltage Temp. Coeff.	--	0.11	--	V/℃	I_D=250μA ***See Fig 7***
$V_{GS(th)}$	Gate Threshold Voltage	2.0	--	4.0	V	V_{DS}=5V,I_D=250μA
I_{GSS}	Gate-Source Leakage , Forward	--	--	100	nA	V_{GS}=20V
	Gate-Source Leakage , Reverse	--	--	-100		V_{GS}=-20V
I_{DSS}	Drain-to-Source Leakage Current	--	--	10	μA	V_{DS}=100V
		--	--	100		V_{DS}=80V,T_C=150℃
$R_{DS(on)}$	Static Drain-Source On-State Resistance	--	--	0.11	Ω	V_{GS}=10V,I_D=7A ④
g_{fs}	Forward Transconductance	--	10.25	--	Ω	V_{DS}=40V,I_D=7A ④
C_{iss}	Input Capacitance	--	610	790	pF	V_{GS}=0V,V_{DS}=25V,f =1MHz ***See Fig 5***
C_{oss}	Output Capacitance	--	150	175		
C_{rss}	Reverse Transfer Capacitance	--	62	72		
$t_{d(on)}$	Turn-On Delay Time	--	13	40	ns	V_{DD}=50V,I_D=14A, R_G=12Ω ***See Fig 13*** ④⑤
t_r	Rise Time	--	14	40		
$t_{d(off)}$	Turn-Off Delay Time	--	55	110		
t_f	Fall Time	--	36	80		
Q_g	Total Gate Charge	--	27	36	nC	V_{DS}=80V,V_{GS}=10V, I_D=14A ***See Fig 6 & Fig 12*** ④⑤
Q_{gs}	Gate-Source Charge	--	4.5	--		
Q_{gd}	Gate-Drain(“Miller”) Charge	--	12.8	--		

Source-Drain Diode Ratings and Characteristics

Symbol	Characteristic	Min.	Typ.	Max.	Units	Test Condition
I_S	Continuous Source Current	--	--	14	A	Integral reverse pn-diode in the MOSFET
I_{SM}	Pulsed-Source Current ①	--	--	56		
V_{SD}	Diode Forward Voltage ④	--	--	1.5	V	T_J=25℃,I_S=14A,V_{GS}=0V
t_{rr}	Reverse Recovery Time	--	109	--	ns	T_J=25℃,I_F=14A di_F/dt=100A/μs ④
Q_{rr}	Reverse Recovery Charge	--	0.41	--	μC	

Notes ;

① Repetitive Rating : Pulse Width Limited by Maximum Junction Temperature
② L=2mH, I_{AS}=14A, V_{DD}=25V, R_G=27Ω, Starting T_J=25°C
③ I_{SD} ≤ 14A, di/dt ≤ 350A/μs, V_{DD}≤ BV_{DSS} , Starting T_J=25°C
④ Pulse Test : Pulse Width = 250 μs, Duty Cycle ≤2%
⑤ Essentially Independent of Operating Temperature

Fig 1. Output Characteristics

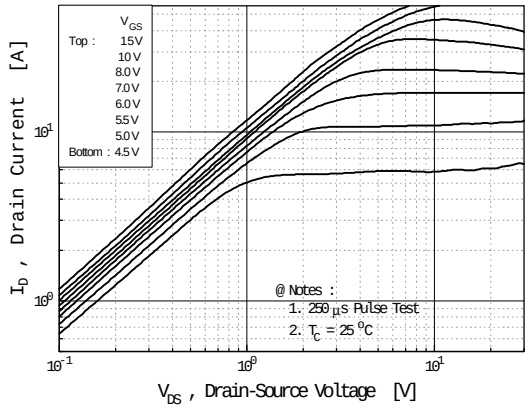

Fig 2. Transfer Characteristics

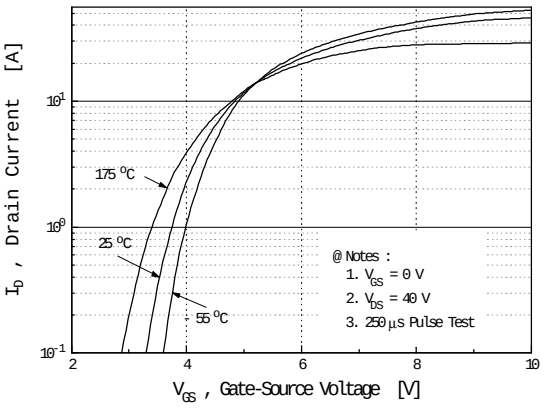

Fig 3. On-Resistance vs. Drain Current

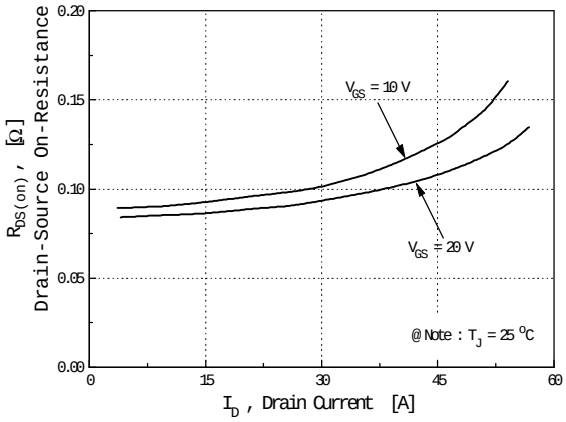

Fig 4. Source-Drain Diode Forward Voltage

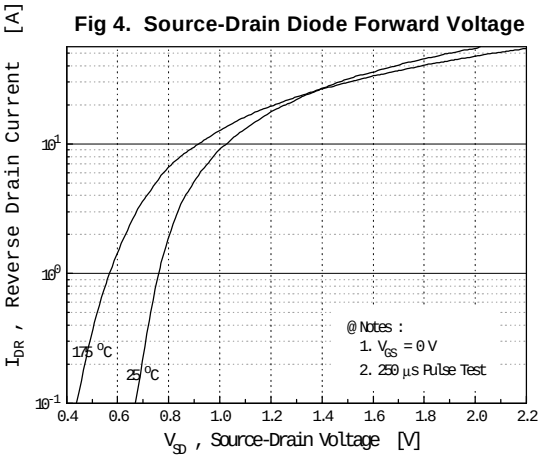

Fig 5. Capacitance vs. Drain-Source Voltage

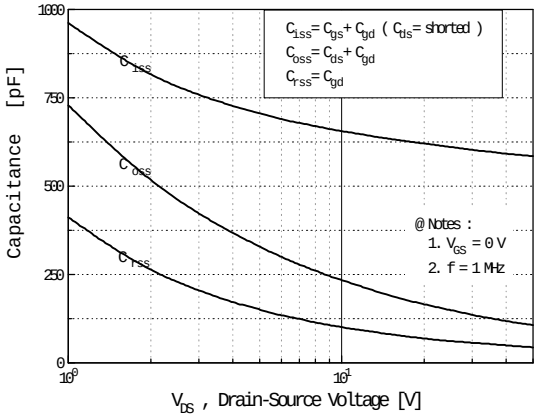

Fig 6. Gate Charge vs. Gate-Source Voltage

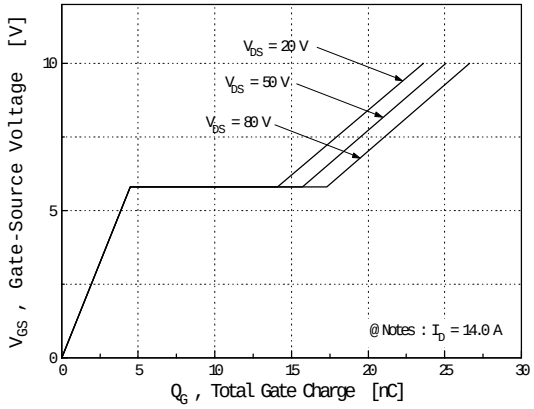

Fig 7. Breakdown Voltage vs. Temperature

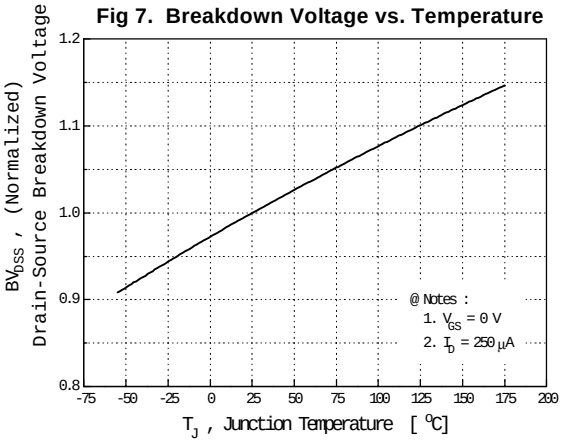

Fig 8. On-Resistance vs. Temperature

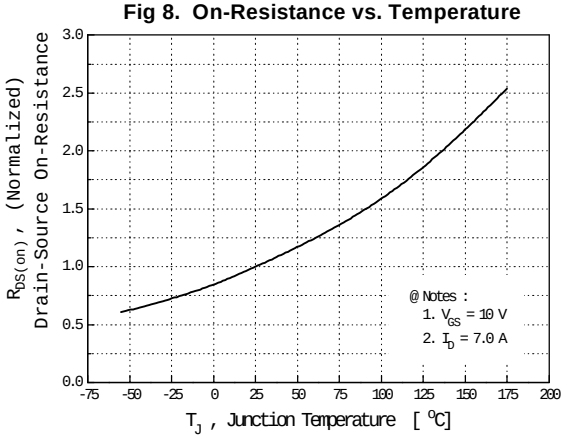

Fig 9. Max. Safe Operating Area

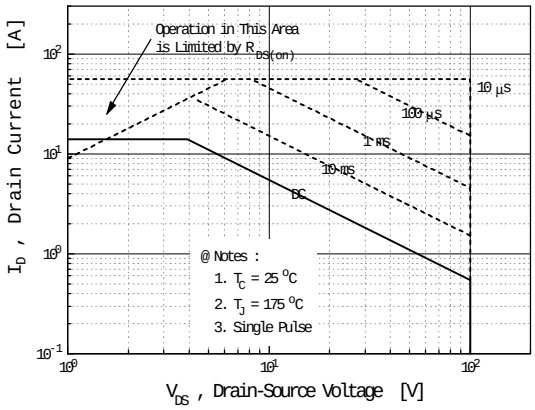

Fig 10. Max. Drain Current vs. Case Temperature

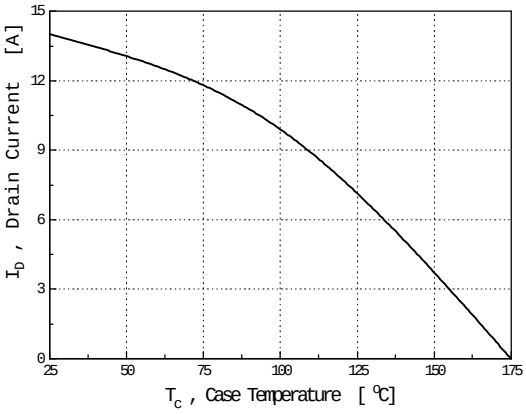

Fig 11. Thermal Response

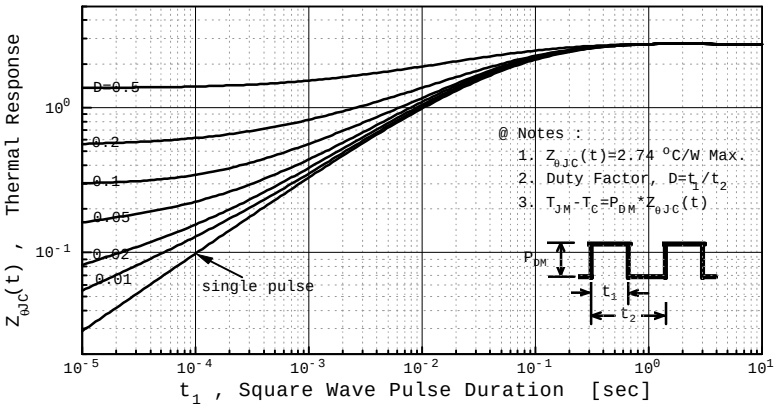

Fig 12. Gate Charge Test Circuit & Waveform

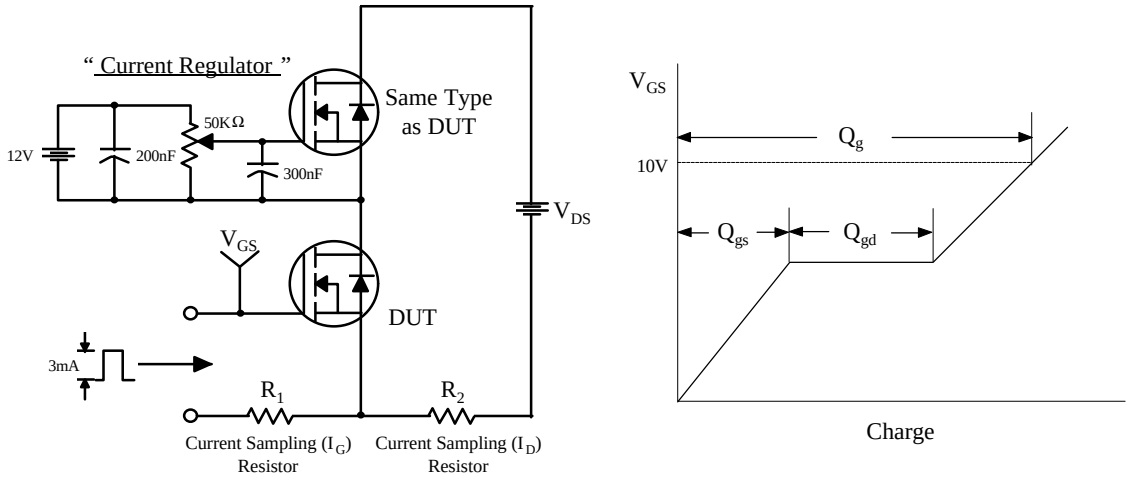

Fig 13. Resistive Switching Test Circuit & Waveforms

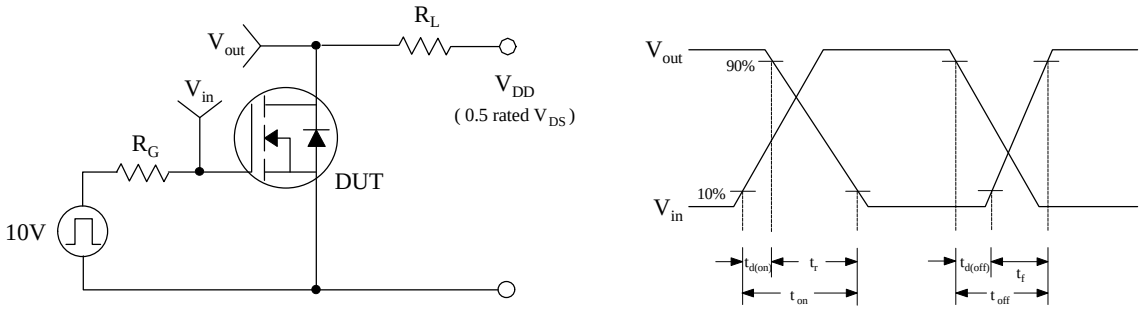

Fig 14. Unclamped Inductive Switching Test Circuit & Waveforms

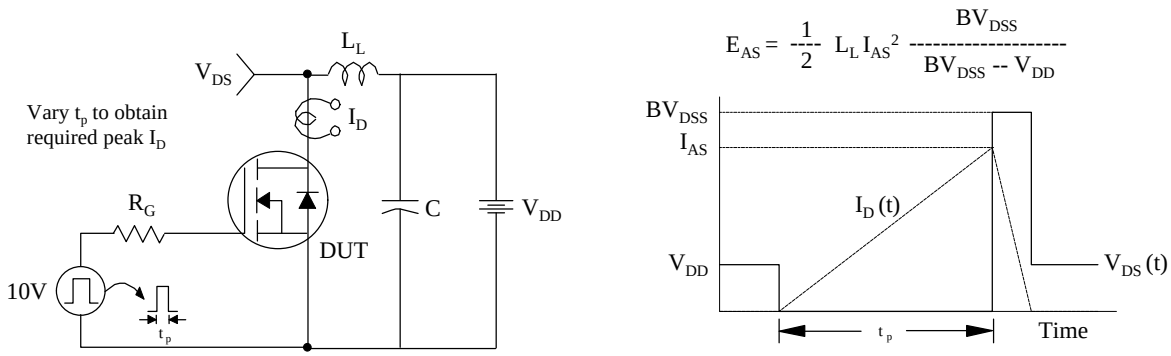

Fig 15. Peak Diode Recovery dv/dt Test Circuit & Waveforms

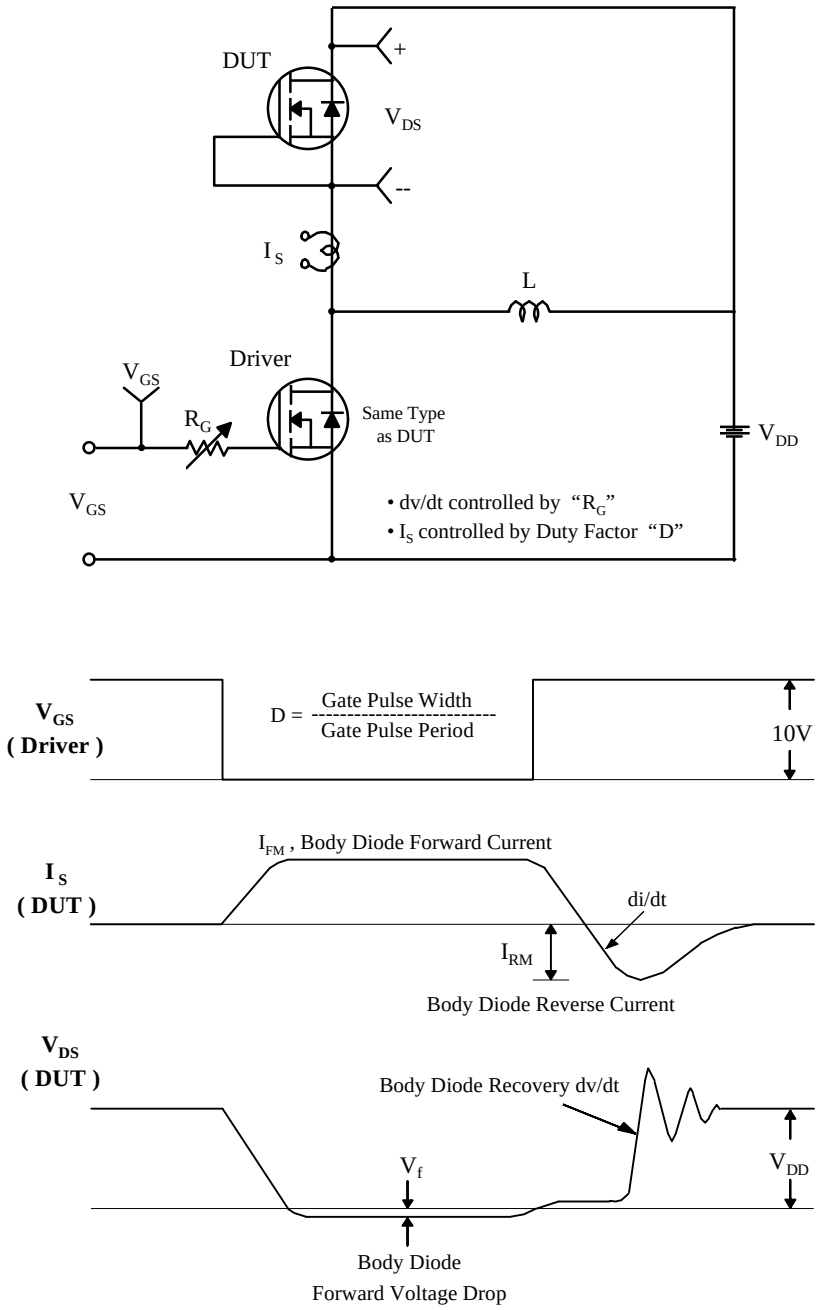

TRADEMARKS

The following are registered and unregistered trademarks Fairchild Semiconductor owns or is authorized to use and is not intended to be an exhaustive list of all such trademarks.

ACEx™
CoolFET™
CROSSVOLT™
E^2CMOS™
FACT™
FACT Quiet Series™
FAST®
FASTr™
GTO™
HiSeC™
ISOPLANAR™
MICROWIRE™
POP™
PowerTrench™
QS™
Quiet Series™
SuperSOT™-3
SuperSOT™-6
SuperSOT™-8
TinyLogic™
UHC™
VCX™

DISCLAIMER

FAIRCHILD SEMICONDUCTOR RESERVES THE RIGHT TO MAKE CHANGES WITHOUT FURTHER NOTICE TO ANY PRODUCTS HEREIN TO IMPROVE RELIABILITY, FUNCTION OR DESIGN. FAIRCHILD DOES NOT ASSUME ANY LIABILITY ARISING OUT OF THE APPLICATION OR USE OF ANY PRODUCT OR CIRCUIT DESCRIBED HEREIN; NEITHER DOES IT CONVEY ANY LICENSE UNDER ITS PATENT RIGHTS, NOR THE RIGHTS OF OTHERS.

LIFE SUPPORT POLICY

FAIRCHILD'S PRODUCTS ARE NOT AUTHORIZED FOR USE AS CRITICAL COMPONENTS IN LIFE SUPPORT DEVICES OR SYSTEMS WITHOUT THE EXPRESS WRITTEN APPROVAL OF FAIRCHILD SEMICONDUCTOR CORPORATION.
As used herein:

1. Life support devices or systems are devices or systems which, (a) are intended for surgical implant into the body, or (b) support or sustain life, or (c) whose failure to perform when properly used in accordance with instructions for use provided in the labeling, can be reasonably expected to result in significant injury to the user.

2. A critical component is any component of a life support device or system whose failure to perform can be reasonably expected to cause the failure of the life support device or system, or to affect its safety or effectiveness.

PRODUCT STATUS DEFINITIONS

Definition of Terms

Datasheet Identification	Product Status	Definition
Advance Information	Formative or In Design	This datasheet contains the design specifications for product development. Specifications may change in any manner without notice.
Preliminary	First Production	This datasheet contains preliminary data, and supplementary data will be published at a later date. Fairchild Semiconductor reserves the right to make changes at any time without notice in order to improve design.
No Identification Needed	Full Production	This datasheet contains final specifications. Fairchild Semiconductor reserves the right to make changes at any time without notice in order to improve design.
Obsolete	Not In Production	This datasheet contains specifications on a product that has been discontinued by Fairchild semiconductor. The datasheet is printed for reference information only.