QUAD 2-INPUT OPEN DRAIN NAND GATE

- LOW POWER DISSIPATION
  I_{CC} = 1 μA (MAX.) at T_A = 25°C
- HIGH NOISE IMMUNITY
  V_{NIH} = V_{NIL} = 28% V_{CC} (MIN.)
- OUTPUT DRIVE CAPABILITY
  10 LSTTL LOADS
- SYMMETRICAL OUTPUT IMPEDANCE
  $|I_{OH}|$ = I_{OL} = 4 mA (MIN.)
- BALANCED PROPAGATION DELAYS
  t_{PLH} = t_{PHL}
- WIDE OPERATING VOLTAGE RANGE
  V_{CC} (OPR) = 2V to 6V
- PIN AND FUNCTION COMPATIBLE
  WITH 54/74LS03

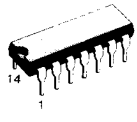

B1N
Plastic Package

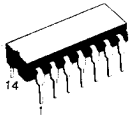

F1
Ceramic Frit Seal Package

M1
Micro Package

C1
Plastic Chip Carrier

ORDERING NUMBERS:

M54HC03 F1	M74HC03 C1
M74HC03 B1N	M74HC03 M1
M74HC03 F1	

DESCRIPTION

The M54/74HC03 is a high speed CMOS QUAD 2 -INPUT OPEN DRAIN NAND GATE fabricated in silicon gate C²MOS technology.
It has the same high speed performance of LSTTL combined with true CMOS low power consumption.

The internal circuit is composed of 3 stages including buffer output, which gives high noise immunity and stable output. This device can, with an external pull-up resistor, be used in wired AND configuration. This device can be also used as a led driver and in any other application requiring a current sink. All inputs are equipped with protection circuits against static discharge and transient excess voltage.

INPUT AND OUTPUT EQUIVALENT CIRCUIT

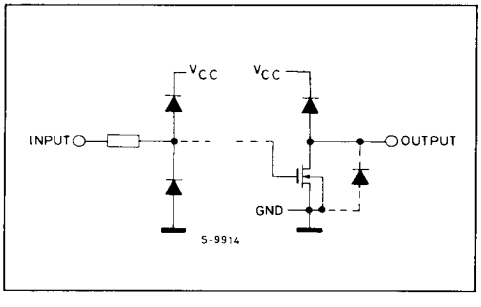

PIN CONNECTIONS (top view)

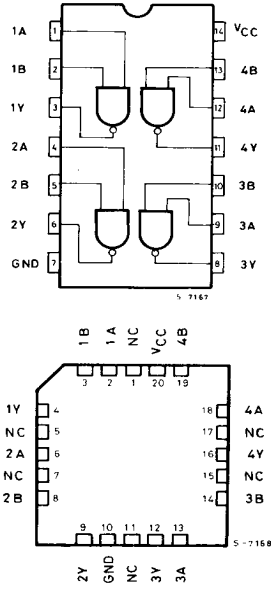

NC = No Internal Connection

TRUTH TABLE

INPUTS		OUTPUT
A	B	Y
L	L	Z
L	H	Z
H	L	Z
H	H	L

Z = HIGH IMPEDANCE

CIRCUIT DIAGRAM

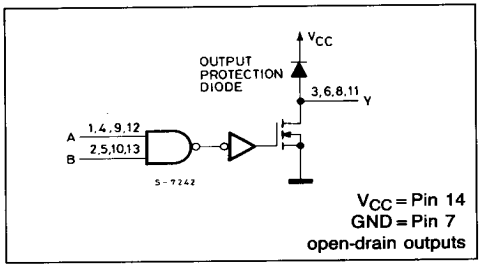

ABSOLUTE MAXIMUM RATINGS

Symbol	Parameter	Value	Unit
V_{CC}	Supply Voltage	−0.5 to 7	V
V_I	DC Input Voltage	−0.5 to V_{CC}+0.5	V
V_O	DC Output Voltage	−0.5 to V_{CC}+0.5	V
I_{IK}	DC Input Diode Current	± 20	mA
I_{OK}	DC Output Diode Current	± 20	mA
I_O	DC Output Source Sink Current Per Output Pin	± 25	mA
I_{CC} or I_{GND}	DC V_{CC} or Ground Current	± 50	mA
P_D	Power Dissipation	500 (*)	mW
T_{stg}	Storage Temperature	−65 to 150	°C
T_L	Lead Temperature	300	°C

Absolute Maximum Ratings are those values beyond which damage to the device may occur. Functional operation under these condition is not implied.

(*) 500 mW: ≅65°C derate to 300 mW by 10 mW/°C: 65°C to 85°C

RECOMMENDED OPERATING CONDITIONS

Symbol	Parameter		Value		Unit
V_{CC}	Supply Voltage		2 to 6		V
V_I	Input Voltage		0 to V_{CC}		V
V_O	Output Voltage		0 to V_{CC}		V
T_A	Operating Temperature	74HC Series 54HC Series	− 40 to 85 −55 to 125		°C
t_r, t_f	Input Rise and Fall Time		V_{CC} 2 V	0 to 1000	ns
			V_{CC} 4.5V	0 to 500	
			V_{CC} 6 V	0 to 400	

DC SPECIFICATIONS

Symbol	Parameter	V_{CC}	Test Condition		$T_A = 25°C$ 54HC and 74HC			-40 to $85°C$ 74HC		-55 to $125°C$ 54HC		Unit
					Min.	Typ.	Max.	Min.	Max.	Min.	Max.	
V_{IH}	High Level Input Voltage	2.0			1.5	—	—	1.5	—	1.5	—	V
		4.5			3.15	—	—	3.15	—	3.15	—	
		6.0			4.2	—	—	4.2	—	4.2	—	
V_{IL}	Low Level Input Voltage	2.0			—	—	0.5	—	0.5	—	0.5	V
		4.5			—	—	1.35	—	1.35	—	1.35	
		6.0			—	—	1.8	—	1.8	—	1.8	
V_{OL}	Low Level Output Voltage	2.0	V_I	I_O	—	0	0.1	—	0.1	—	0.1	V
		4.5	V_{IH} or V_{IL}	20 μA	—	0	0.1	—	0.1	—	0.1	
		6.0			—	0	0.1	—	0.1	—	0.1	
		4.5		4.0 mA	—	0.17	0.26	—	0.33	—	0.40	
		6.0		5.2 mA	—	0.18	0.26	—	0.33	—	0.40	
I_I	Input Leakage Current	6.0	$V_{IN} = V_{CC}$ or GND		—	—	±0.1	—	±1.0	—	±1.0	μA
I_{OZ}	Output Leakage Current	6.0	$V_I = V_{IH}$ or V_{IL} $V_O = V_{CC}$ or GND		—	—	±0.5	—	±5.0	—	±10	
I_{CC}	Quiescent Supply Current	6.0	$V_{IN} = V_{CC}$ or GND		—	—	1	—	10	—	20	μA

AC ELECTRICAL CHARACTERISTICS ($V_{CC} = 5V$, $C_L = 15pF$, Input $t_r = t_f = 6ns$ $T_A = 25°C$)

Symbol	Parameter	Test Condition	Min	Typ	Max	Unit
t_{TLH} t_{THL}	Output Transition Time			4	8	ns
t_{PLZ} t_{PZL}	Propagation Delay Time	$C_L = 5pF$		8	16	ns
		$C_L = 15pF$		10	20	

AC ELECTRICAL CHARACTERISTICS ($C_L = 50pF$, Input $t_r = t_f = 6ns$)

Symbol	Parameter	V_{CC}	Test Condition	$T_A = 25°C$ 54HC and 74HC			– 40 to 85°C 74HC		– 55 to 125°C 54HC		Unit
				Min.	Typ.	Max.	Min.	Max.	Min.	Max.	
t_{TLH} t_{THL}	Output Transition Time	2.0		—	30	75	—	95	—	110	ns
		4.5		—	8	15	—	19	—	22	
		6.0		—	7	13	—	16	—	19	
t_{PZL} t_{PLZ}	Propagation Delay Time	2.0	$R_L = 1K\Omega$	—	52	125	—	155	—	190	ns
		4.5		—	13	25	—	31	—	38	
		6.0		—	11	21	—	26	—	32	
C_{IN}	Input Capacitance			—	5	10	—	10	—	10	pF
C_{OUT}	Output Capacitance			—	5	—	—	—	—	—	pF
C_{PD} (*)	Power Dissipation Capacitance			—	17	—	—	—	—	—	pF

Note (*) C_{PD} is defined as the value of the IC's internal equivalent capacitance which is calculated from the operating current consumption without load.
Average operating current can be obtained from the equation:
$I_{CC(opr.)} = C_{PD} \cdot V_{CC} \cdot f_{IN} + I_{CC}/4$ [per Gate]

TYPICAL APPLICATIONS

Wired AND

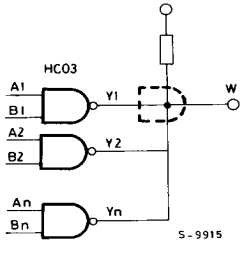

$$W = Y1\ Y2 \ldots Yn = \overline{A1B1}\ \overline{A2B2} \ldots \overline{AnBn} = \overline{A1B1 + A2B2 + \ldots AnBn}$$

LED Driver with Blanking

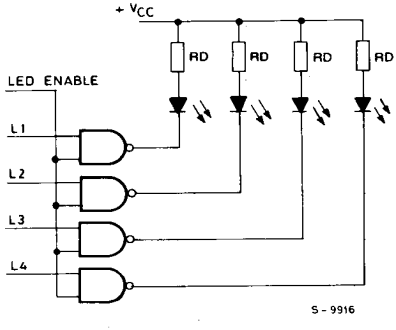

Typical values
$V_{CC} = 5V$
$V_D = 2V$
$V_{DS} = 0.4V$
$R_D = 120 \div 270\Omega$

$I_D = 10 \div 20mA$

$$R_D = \frac{V_{CC} - V_D - V_{DS}}{I_D} = \frac{5 - 2 - 0.4}{(10 - 20)10^{-3}} = 130 \div 260\Omega$$