DUAL 2-TO-4 LINE DECODER/DEMULTIPLEXER

- HIGH SPEED
  t_{PD} = 16 ns (TYP.) at V_{CC} = 5V
- LOW POWER DISSIPATION
  I_{CC} = 4 μA (MAX.) at T_A = 25°C
- HIGH NOISE IMMUNITY
  V_{NIH} = V_{NIL} = 28% V_{CC} (MIN.)
- OUTPUT DRIVE CAPABILITY
  10 LSTTL LOADS
- SYMMETRICAL OUTPUT IMPEDANCE
  $|I_{OH}|$ = I_{OL} = 4 mA (MIN.)
- BALANCED PROPAGATION DELAYS
  t_{PLH} = t_{PHL}
- WIDE OPERATING VOLTAGE RANGE
  V_{CC} (OPR) = 2V to 6V
- PIN AND FUNCTION COMPATIBLE
  WITH 54/74LS139

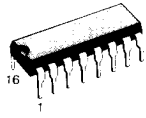

B1N
Plastic Package

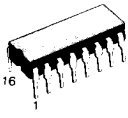

F1
Ceramic Frit Seal Package

M1
SO Micro Package

C1
Plastic Chip Carrier

ORDERING NUMBERS:

M54HC139 F1	M74HC139 C1
M74HC139 B1N	M74HC139 M1
M74HC139 F1	

DESCRIPTION

The M54/74HC139 is a high speed CMOS DUAL TWO LINE TO FOUR LINE DECODER/DEMULTIPLEXER fabricated in silicon gate C2MOS technology. It has the same high speed performance of LSTTL combined with true CMOS low power consumption. The active low enable input can be used for gating or as a data input for demultiplexing applications. While the enable input is held high, all four outputs are high independently of the other inputs. All inputs are equipped with protection circuits against static discharge and transient excess voltage.

INPUT AND OUTPUT EQUIVALENT CIRCUIT

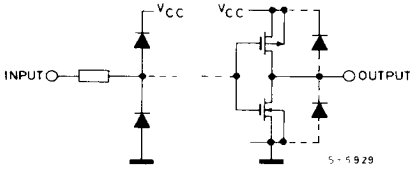

PIN CONNECTIONS (top view)

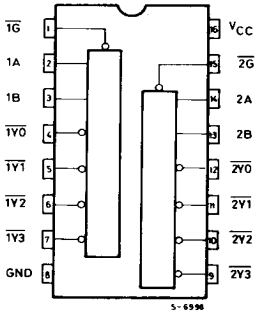

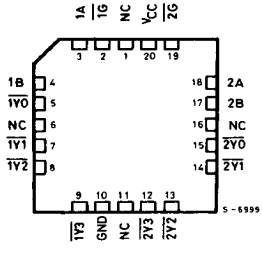

NC = No Internal Connection

TRUTH TABLE

INPUTS			OUTPUS				SELECTED OUTPUT
ENABLE	SELECT						
$\overline{G}$	B	A	$\overline{Y0}$	$\overline{Y1}$	$\overline{Y2}$	$\overline{Y3}$	
H	X	X	H	H	H	H	NONE
L	L	L	L	H	H	H	$\overline{Y0}$
L	L	H	H	L	H	H	$\overline{Y1}$
L	H	L	H	H	L	H	$\overline{Y2}$
L	H	H	H	H	H	L	$\overline{Y3}$

X: DON'T CARE

LOGIC DIAGRAM

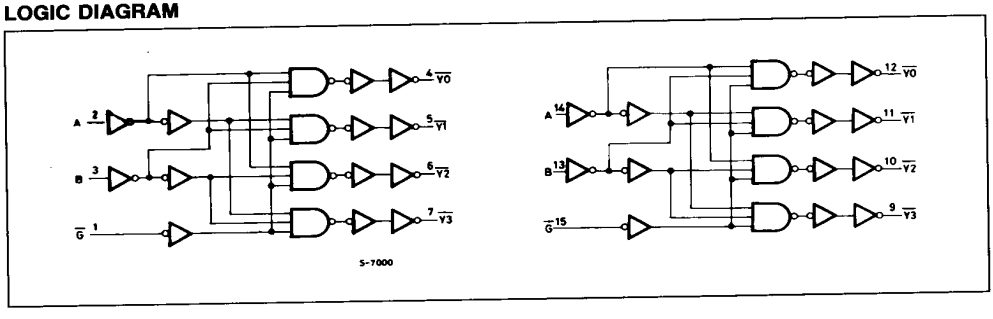

ABSOLUTE MAXIMUM RATINGS

Symbol	Parameter	Value	Unit
V_{CC}	Supply Voltage	−0.5 to 7	V
V_I	DC Input Voltage	−0.5 to V_{CC}+0.5	V
V_O	DC Output Voltage	−0.5 to V_{CC}+0.5	V
I_{IK}	DC Input Diode Current	± 20	mA
I_{OK}	DC Output Diode Current	± 20	mA
I_O	DC Output Source Sink Current Per Output Pin	± 25	mA
I_{CC} or I_{GND}	DC V_{CC} or Ground Current	± 50	mA
P_D	Power Dissipation	500 (*)	mW
T_{stg}	Storage Temperature	−65 to 150	°C

Absolute Maximum Ratings are those values beyond which damage to the device may occur. Functional operation under these condition is not implied.

(*) 500 mW:≅65°C derate to 300 mW by 10 mW/°C: 65°C to 85°C

RECOMMENDED OPERATING CONDITIONS

Symbol	Parameter		Value		Unit
V_{CC}	Supply Voltage		2 to 6		V
V_I	Input Voltage		0 to V_{CC}		V
V_O	Output Voltage		0 to V_{CC}		V
T_A	Operating Temperature	74HC Series 54HC Series	– 40 to 85 – 55 to 125		°C
t_r, t_f	Input Rise and Fall Time		V_{CC} 2 V V_{CC} 4.5V V_{CC} 6 V	0 to 1000 0 to 500 0 to 400	ns

DC SPECIFICATIONS

Symbol	Parameter	V_{CC}	Test Condition		$T_A = 25°C$ 54HC and 74HC			– 40 to 85°C 74HC		– 55 to 125°C 54HC		Unit
					Min.	Typ.	Max.	Min.	Max.	Min.	Max.	
V_{IH}	High Level Input Voltage	2.0			1.5	—	—	1.5	—	1.5	—	V
		4.5			3.15	—	—	3.15	—	3.15	—	
		6.0			4.2	—	—	4.2	—	4.2	—	
V_{IL}	Low Level Input Voltage	2.0			—	—	0.5	—	0.5	—	0.5	V
		4.5			—	—	1.35	—	1.35	—	1.35	
		6.0			—	—	1.8	—	1.8	—	1.8	
V_{OH}	High Level Output Voltage	2.0	V_I	I_O	1.9	2.0	—	1.9	—	1.9	—	V
		4.5	V_{IH} or V_{IL}	– 20 μA	4.4	4.5	—	4.4	—	4.4	—	
		6.0			5.9	6.0	—	5.9	—	5.9	—	
		4.5		– 4.0 mA	4.18	4.31	—	4.13	—	4.10	—	
		6.0		– 5.2 mA	5.68	5.8	—	5.63	—	5.60	—	
V_{OL}	Low Level Output Voltage	2.0	V_{IH} or V_{IL}	20 μA	—	0	0.1	—	0.1	—	0.1	V
		4.5			—	0	0.1	—	0.1	—	0.1	
		6.0			—	0	0.1	—	0.1	—	0.1	
		4.5		4.0 mA	—	0.17	0.26	—	0.33	—	0.40	
		6.0		5.2 mA	—	0.18	0.26	—	0.33	—	0.40	
I_I	Input Leakage Current	6.0	$V_I = V_{CC}$ or GND		—	—	±0.1	—	±1	—	±1	μA
I_{CC}	Quiescent Supply Current	6.0	$V_I = V_{CC}$ or GND		—	—	4	—	40	—	80	μA

AC ELECTRICAL CHARACTERISTICS ($V_{CC} = 5V$, $T_A = 25°C$, $C_L = 15pF$, Input $t_r = t_f = 6ns$)

Symbol	Parameter	54HC and 74HC			Unit
		Min.	Typ.	Max.	
t_{TLH} t_{THL}	Output Transition Time		4	8	ns
t_{PLH} t_{PHL}	Propagation Delay Time		16	26	ns
t_{PLH} t_{PHL}	Propagation Delay Time ($\overline{G}$-Y)		14	23	ns

AC ELECTRICAL CHARACTERISTICS ($C_L = 50pF$, Input $t_r = t_f = 6ns$)

Symbol	Parameter	V_{CC}	Test Condition	$T_A = 25°C$ 54HC and 74HC			−40 to 85°C 74HC		−55 to 125°C 54HC		Unit
				Min.	Typ.	Max.	Min.	Max.	Min.	Max.	
t_{TLH} T_{THL}	Output Transition Time	2.0		—	30	75	—	95	—	110	ns
		4.5		—	8	15	—	19	—	22	
		6.0		—	7	13	—	16	—	19	
t_{PLH} t_{PHL}	Propagation Delay Time A, B-Y	2.0		—	76	150	—	190	—	225	ns
		4.5		—	19	30	—	38	—	45	
		6.0		—	17	26	—	33	—	38	
t_{PLH} t_{PHL}	Propagation Delay Time $\overline{G}$-Y	2.0		—	68	135	—	170	—	205	ns
		4.5		—	17	27	—	34	—	41	
		6.0		—	15	23	—	29	—	35	
C_{IN}	Input Capacitance			—	5	10	—	10	—		pF
C_{PD} (*)	Power Dissipation Capacitance			—	49	—	—	—	—	—	pF

Note (*) C_{PD} is defined as the value the IC's of internal equivalent capacitance which is calculated from the operating current consumption without load. (Refer to Test Circuit)
Average operating current can be abtained by the following equation.
$I_{CC(opr)} = C_{PD} \cdot V_{CC} \cdot f_{IN} + I_{CC}$

SWITCHING CHARACTERISTICS TEST CIRCUIT

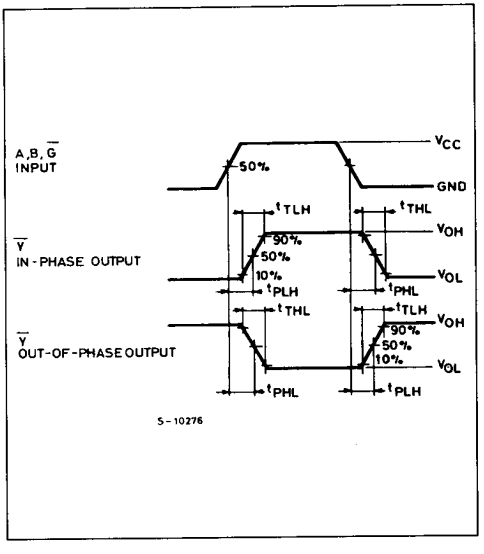

TEST CIRCUIT I_{CC} (Opr.)

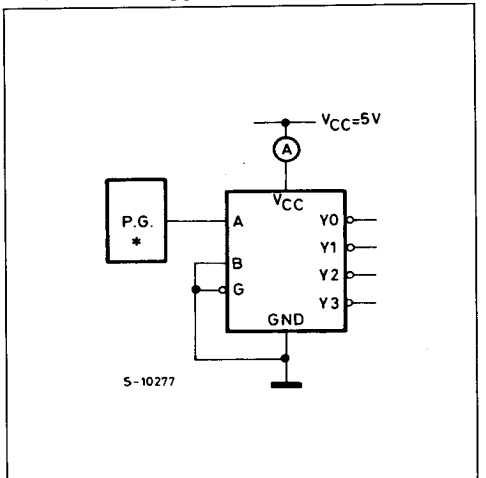

INPUT WAVEFORM IS THE SAME AS THAT IN CASE OF SWITCHING CHARACTERISTICS TEST.