3V MICROPOWER DUAL VOLTAGE COMPARATORS

- DEDICATED TO **3.3V** OR **BATTERY SUPPLY** (specified at 3V and 5V)
- EXTREMELY LOW SUPPLY CURRENT : **9µA typ/comparator**
- WIDE SINGLE SUPPLY RANGE **2.7V to 16V**
- EXTREMELY LOW INPUT CURRENTS : **1pA TYP**
- INPUT COMMON-MODE VOLTAGE RANGE INCLUDES GND
- FAST RESPONSE TIME : 2.5µs typ for 5mV overdrive
- PIN-TO-PIN AND FUNCTIONALLY COMPATIBLE WITH BIPOLAR LM393

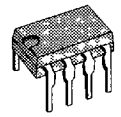

N
DIP8
(Plastic Package)

D
SO8
(Plastic Micropackage)

DESCRIPTION

The TS3V393 is a micropower dual CMOS voltage comparator with extremely low consumption of 9µA typ / comparator (20 times less than bipolar LM393). Similar performances are offered by the dual micropower comparator TS3V3702 with a push-pull CMOS output.

Thus response times remain similar to the LM393.

ORDER CODES

Part Number	Temperature Range	Package	
		N	D
TS3V393I	-40°C, +125°C	●	●

393-01 TBL

PIN CONNECTIONS (top view)

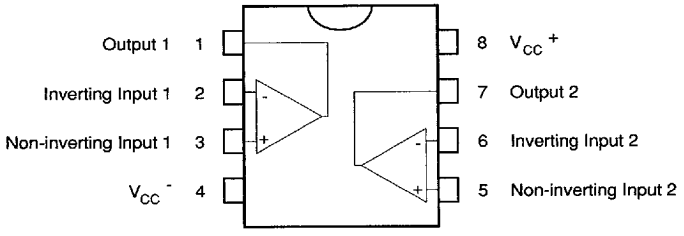

393-01 EPS

SCHEMATIC DIAGRAM (for 1/2 TS3V393)

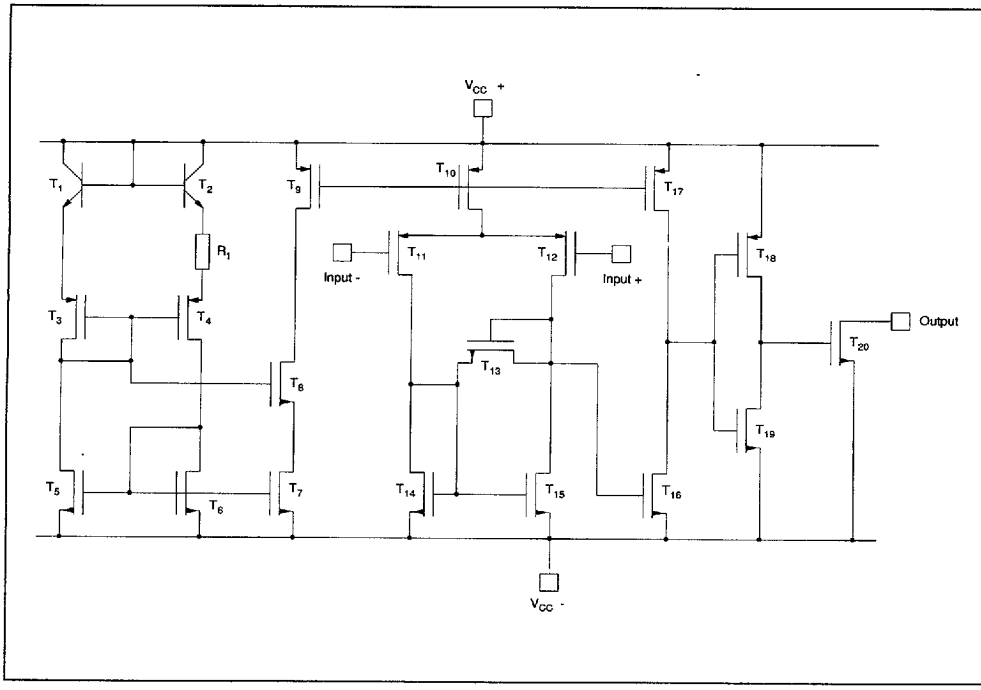

MAXIMUM RATINGS

Symbol	Parameter	Value	Unit
V_{CC}^+	Supply Voltage - (note 1)	18	V
V_{id}	Differential Input Voltage - (note 2)	±18	V
V_i	Input Voltage - (note 3)	18	V
V_O	Output Voltage	18	V
I_O	Output Current	20	mA
T_{oper}	Operating Free-Air Temperature Range TS3V393I	-40 to +125	°C
T_{stg}	Storage Temperature Range	-65 to +150	°C

393-02 TBL

Notes : 1. All voltage values, except differential voltage, are with respect to network ground terminal.
2. Differential voltages are the non-inverting input terminal with respect to the inverting input terminal.
3. The magnitude of the input and the output voltages must never exceed the magnitude of the positive supply voltage.
4. Short circuit from outputs to V_{CC}^+ can cause excessive heating and eventual destruction.

OPERATING CONDITIONS

Symbol	Parameter	Value	Unit
V_{CC}^+	Supply Voltage	2.7 to 16	V
V_{icm}	Common Mode Input Voltage Range	0 to V_{CC}^+ -1.5	V

393-03 TBL

ELECTRICAL CHARACTERISTICS

V_{CC}^{+} = 3V, V_{CC}^{-} = 0V, T_{amb} = 25°C (unless otherwise specified)

Symbol	Parameter	Min.	Typ.	Max.	Unit
V_{io}	Input Offset Voltage - (note 1) V_{ic} = 1.5V $T_{min} \le T_{amb} \le T_{max}$.			5 6.5	mV
I_{io}	Input Offset Current - (note 2) V_{ic} = 1.5 V $T_{min} \le T_{amb} \le T_{max}$.		1	 300	pA
I_{ib}	Input Bias Current - (note 2) V_{ic} = 1.5 V $T_{min} \le T_{amb} \le T_{max}$.		1	 600	pA
V_{icm}	Input Common Mode Voltage Range $T_{min} \le T_{amb} \le T_{max}$.	0 to V_{CC}^{+}-1.2 0 to V_{CC}^{+} -1.5			V
CMR	Common-mode Rejection Ratio $V_{ic} = V_{icm\ min}$.		70		dB
SVR	Supply Voltage Rejection Ratio V_{CC}^{+} = 3V to 5V		70		dB
I_{OH}	High Level Output Current V_{id} = -1V, V_{OH} = 3V $T_{min} \le T_{amb} \le T_{max}$.		2	40 1000	mA
V_{OL}	Low Level Output Voltage V_{id} = -1V, I_{OL} = -6mA $T_{min} \le T_{amb} \le T_{max}$.		400	500 600	mV
I_{CC}	Supply Current (each comparator) No load - Outputs low $T_{min} \le T_{amb} \le T_{max}$.		9	20 25	µA
t_{PLH}	Response Time Low to High V_{ic} = 0V, f = 10kHz, R_L = 5.1kΩ, C_L = 15pF, Overdrive = 5mV TTL Input		2 0.7		µs
t_{PHL}	Response Time High to Low V_{ic} = 0V, f = 10kHz, R_L = 5.1kΩ, C_L = 50pF, Overdrive = 5mV TTL Input		2.5 0.08		µs

393-04 TBL

Note : 1. The specified offset voltage is the maximun value required to drive the output up to 4.5V or down to 0.3V.
2. Maximum values including unavoidable inaccuracies of the industrial test.

ELECTRICAL CHARACTERISTICS

$V_{CC}^+ = 5V$, $V_{CC}^- = 0V$, $T_{amb} = 25°C$ (unless otherwise specified)

Symbol	Parameter	Min.	Typ.	Max.	Unit
V_{io}	Input Offset Voltage - (note 1) $V_{ic} = 2.5V$ $T_{min} \leq T_{amb} \leq T_{max}$.		1.4	5 6.5	mV
I_{io}	Input Offset Current - (note 2) $V_{ic} = 2.5$ V $T_{min} \leq T_{amb} \leq T_{max}$.		1	300	pA
I_{ib}	Input Bias Current - (note 2) $V_{ic} = 2.5$ V $T_{min} \leq T_{amb} \leq T_{max}$.		1	600	pA
V_{icm}	Input Common Mode Voltage Range $T_{min} \leq T_{amb} \leq T_{max}$.	0 to V_{CC}^+-1.2 0 to V_{CC}^+ -1.5			V
CMR	Common-mode Rejection Ratio $V_{ic} = V_{icm\ min}$.		70		dB
SVR	Supply Voltage Rejection Ratio $V_{CC}^+ = +5V$ to $+10V$		80		dB
I_{OH}	High Level Output Current $V_{id} = 1V$, $V_{OH} = +5V$ $T_{min} \leq T_{amb} \leq T_{max}$.		2	40 1000	mA
V_{OL}	Low Level Output Voltage $V_{id} = -1V$, $I_{OL} = 6mA$ $T_{min.} \leq T_{amb} \leq T_{max}$.		260	400 650	mV
I_{CC}	Supply Current (each comparator) No load - Outputs low $T_{min.} \leq T_{amb} \leq T_{max}$.		10	20 25	µA
t_{PLH}	Response Time Low to High $V_{ic} = 0V$, f = 10kHz, $R_L = 5.1k\Omega$, $C_L = 50pF$, Overdrive = 5mV TTL Input		1.5 0.7		µs
t_{PHL}	Response Time High to Low $V_{ic} = 0V$, f = 10kHz, $R_L = 5.1k\Omega$, $C_L = 50pF$, Overdrive = 5mV TTL Input		2.5 0.08		µs

393 05 TBL

Note : 1. The specified offset voltage is the maximun value required to drive the output up to 4 5V or down to 0.3V
2 Maximum values including unavoidable inaccuracies of the industrial test.