SGS-THOMSON MICROELECTRONICS

74LCX240

LOW VOLTAGE CMOS OCTAL BUS BUFFER (INVERTED) WITH 5V TOLERANT INPUTS AND OUTPUTS

- 5V TOLERANT INPUTS AND OUTPUTS
- HIGH SPEED:
  t_{PD} = 6.5 ns (MAX.) at V_{CC} = 3V
- POWER-DOWN PROTECTION ON INPUTS AND OUTPUTS
- SYMMETRICAL OUTPUT IMPEDANCE:
  $|I_{OH}| = I_{OL}$ = 24 mA (MIN)
- PCI BUS LEVELS GUARANTEED AT 24mA
- BALANCED PROPAGATION DELAYS:
  $t_{PLH} \cong t_{PHL}$
- OPERATING VOLTAGE RANGE:
  V_{CC} (OPR) = 2.0V to 3.6V (1.5V Data Retention)
- PIN AND FUNCTION COMPATIBLE WITH 74 SERIES 240
- LATCH-UP PERFORMANCE EXCEEDS 500mA
- ESD PERFORMANCE:
  HBM >2000V; MM > 200V

M (Micro Package) **T** (TSSOP Package)

ORDER CODES :

74LCX240M 74LCX240T

DESCRIPTION

The LCX240 is a low voltage CMOS OCTAL BUS BUFFER fabricated with sub-micron silicon gate and double-layer metal wiring C^2MOS technology. It is ideal for low power and high speed 3.3V applications; it can be interfaced to 5V signal enviroment for both inputs and outputs. It has same speed performance at 3.3V than 5V AC/ACT family, combined with a lower power consumption.

This device is designed to be used with 3 state memory address drivers, etc.

All inputs and outputs are equipped with protection circuits against static discharge, giving them 2KV ESD immunity and transient excess voltage.

PIN CONNECTION AND IEC LOGIC SYMBOLS

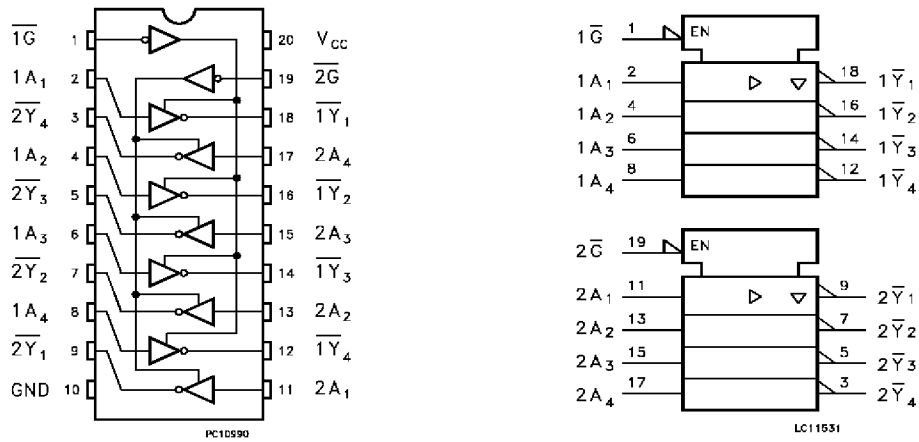

INPUT AND OUTPUT EQUIVALENT CIRCUIT

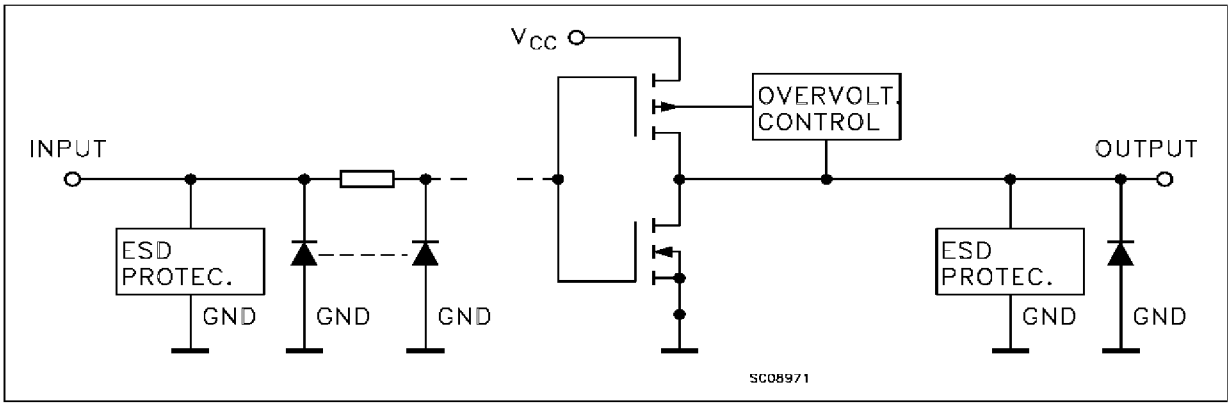

PIN DESCRIPTION

PIN No	SYMBOL	NAME AND FUNCTION
1	$\overline{1G}$	Output Enable Input
2, 4, 6, 8	1A1 to 1A4	Data Inputs
9, 7, 5, 3	$\overline{2Y1}$ to $\overline{2Y4}$	Data Outputs
11, 13, 15, 17	2A1 to 2A4	Data Inputs
18, 16, 14, 12	$\overline{1Y1}$ to $\overline{1Y4}$	Data Outputs
19	$\overline{2G}$	Output Enabel Input
10	GND	Ground (0V)
20	V_{CC}	Positive Supply Voltage

TRUTH TABLE

INPUT		OUTPUT
$\overline{G}$	An	$\overline{Yn}$
L	L	H
L	H	L
H	X	Z

X: "H" or "L"
Z: High impedance

ABSOLUTE MAXIMUM RATINGS

Symbol	Parameter	Value	Unit
V_{CC}	Supply Voltage	-0.5 to + 7.0	V
V_I	DC Input Voltage	-0.5 to + 7.0	V
V_O	DC Output Voltage (V_{CC}= 0V)	-0.5 to + 7.0	V
V_O	DC Output Voltage (High or Low State) (note1)	-0.5 to V_{CC} + 0.5	V
I_{IK}	DC Input Diode Current	- 50	mA
I_{OK}	DC Output Diode Current (note2)	± 50	mA
I_O	DC Output Source/Sink Current	± 50	mA
I_{CC}	DC Supply Current per Supply Pin	± 100	mA
I_{GND}	DC Ground Current per Supply Pin	± 100	mA
T_{stg}	Storage Temperature	-65 to +150	°C
T_L	Lead Temperature (10 sec)	300	°C

Absolute Maximum Ratings are those values beyond which damage to the device may occur. Functional operation under these condition is not implied.
1) I_O absolute maximum rating must be observed
2) V_O < GND, V_O > V_{CC}

RECOMMENDED OPERATING CONDITIONS

Symbol	Parameter	Value	Unit
V_{CC}	Supply Voltage (note 1)	2.0 to 3.6	V
V_I	Input Voltage	0 to 5.5	V
V_O	Output Voltage (V_{CC}= 0V)	0 to 5.5	V
V_O	Output Voltage (High or Low State)	0 to V_{CC}	V
I_{OH}, I_{OL}	High or Low Level Output Current (V_{CC} = 3.0 to 3.6V)	± 24	mA
I_{OH}, I_{OL}	High or Low Level Output Current (V_{CC} = 2.7 to 3.0V)	± 12	mA
T_{op}	Operating Temperature:	-40 to +85	°C
dt/dv	Input Transition Rise or Fall Rate (V_{CC} = 3.0V) (note 2)	0 to 10	ns/V

1) Truth Table guaranteed: 1.5V to 3.6V
2) V_{IN} from 0.8V to 2.0V

DC SPECIFICATIONS

Symbol	Parameter	Test Conditions			Value		Unit
		V_{CC} (V)			-40 to 85 °C		
					Min.	Max.	
V_{IH}	High Level Input Voltage	2.7 to 3.6			2.0		V
V_{IL}	Low Level Input Voltage					0.8	V
V_{OH}	High Level Output Voltage	2.7 to 3.6	$V_I = V_{IH}$ or V_{IL}	I_O=-100 µA	V_{CC}-0.2		V
		2.7		I_O=-12 mA	2.2		
		3.0		I_O=-18 mA	2.4		
				I_O=-24 mA	2.2		
V_{OL}	Low Level Output Voltage	2.7 to 3.6	$V_I = V_{IH}$ or V_{IL}	I_O=100 µA		0.2	V
		2.7		I_O=12 mA		0.4	
		3.0		I_O=16 mA		0.4	
		3.0		I_O=24 mA		0.55	
I_I	Input Leakage Current	2.7 to 3.6	V_I = 0 to 5.5 V			±5	µA
I_{OZ}	3 State Output Leakage Current	2.7 to 3.6	$V_I = V_{IH}$ or V_{IL} V_O = 0 to 5.5V			±5	µA
I_{off}	Power Off Leakage Current	0	V_I or V_O = 5.5V			100	µA
I_{CC}	Quiescent Supply Current	2.7 to 3.6	$V_I = V_{CC}$ or GND			10	µA
			V_I or V_O = 3.6 to 5.5V			±10	
ΔI_{CC}	ICC incr. per input	2.7 to 3.6	$V_{IH} = V_{CC}$ -0.6V			500	µA

DYNAMIC SWITCHING CHARACTERISTICS

Symbol	Parameter	Test Conditions		Value			Unit
		V_{CC} (V)		T_A = 25 °C			
				Min.	Typ.	Max.	
V_{OLP}	Dynamic Low Voltage Quiet Output (note 1)	3.3	C_L = 50 pF V_{IL} = 0 V V_{IH} = 3.3V		0.8		V
V_{OLV}					-0.8		

1) Number of outputs defined as "n". Measured with "n-1" outputs switching from HIGH to LOW or LOW to HIGH. The remaining output is measured in the LOW state.

AC ELECTRICAL CHARACTERISTICS (C_L = 50 pF, R_L = 500 Ω, Input $t_r = t_f$ = 2.5 ns)

Symbol	Parameter	Test Condition		Value		Unit
		V_{CC} (V)	Waveform	-40 to 85 °C		
				Min.	Max.	
t_{PLH} t_{PHL}	Propagation Delay Time	2.7	1	1.5	7.5	ns
		3.0 to 3.6		1.5	6.5	
t_{PZL} t_{PZH}	Output Enable Time	2.7	2	1.5	9.0	ns
		3.0 to 3.6		1.5	8.0	
t_{PLZ} t_{PHZ}	Output Disable Time	2.7	2	1.5	8.0	ns
		3.0 to 3.6		1.5	7.0	
t_{OSLZ} t_{OSHL}	Output to Output Skew Time (note 1, 2)	3.0 to 3.6			1.0	ns

1) Skew is defined as the absolute value of the difference between the actual propagation delay for any two outputs of the same device switching in the same direction, either HIGH or LOW ($t_{OSLH} = |t_{PLHm} - t_{PLHn}|$, $t_{OSHL} = |t_{PHLm} - t_{PHLn}|$)
2) Parameter guaranteed by design

CAPACITIVE CHARACTERISTICS

Symbol	Parameter	Test Conditions		Value			Unit
		V_{CC} (V)		T_A = 25 °C			
				Min.	Typ.	Max.	
C_{IN}	Input Capacitance	3.3	V_{IN} = 0 to V_{CC}		6		pF
C_{OUT}	Output Capacitance	3.3	V_{IN} = 0 to V_{CC}		10		pF
C_{PD}	Power Dissipation Capacitance (note 1)	3.3	f_{IN} = 10MHz V_{IN} = 0 or V_{CC}		40		pF

1) C_{PD} is defined as the value of the IC's internal equivalent capacitance which is calculated from the operating current consumption without load. Average operting current can be obtained by the following equation. $I_{CC}(opr) = C_{PD} \bullet V_{CC} \bullet f_{IN} + I_{CC}/n$ (per circuit)

TEST CIRCUIT

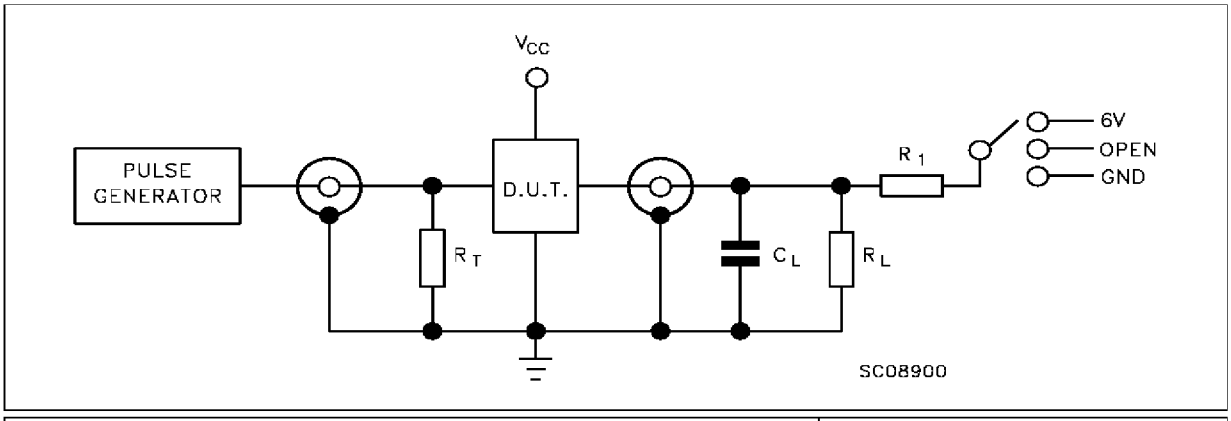

TEST	SWITCH
t_{PLH}, t_{PHL}	Open
t_{PZL}, t_{PLZ}	6V
t_{PZH}, t_{PHZ}	GND

C_L = 50 pF or equivalent (includes jig and probe capacitance)
$R_L = R_1$ = 500Ω or equivalent
$R_T = Z_{OUT}$ of pulse generator (typically 50Ω)

WAVEFORM 1: PROPAGATION DELAYS (f=1MHz; 50% duty cicle)

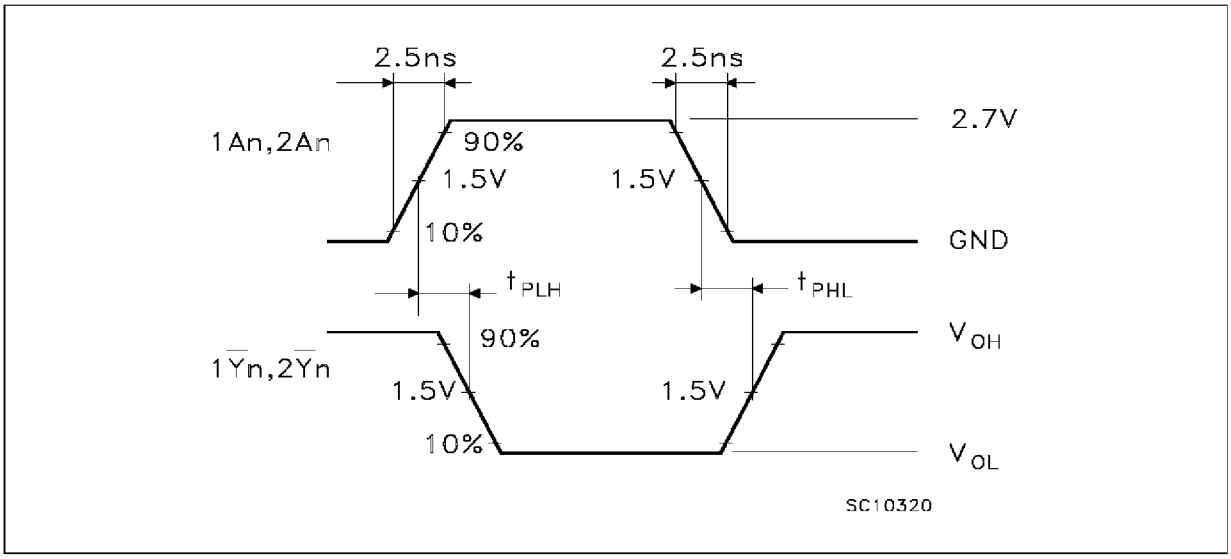

WAVEFORM 2: OUTPUT ENABLE AND DISABLE TIME (f=1MHz; 50% duty cicle)

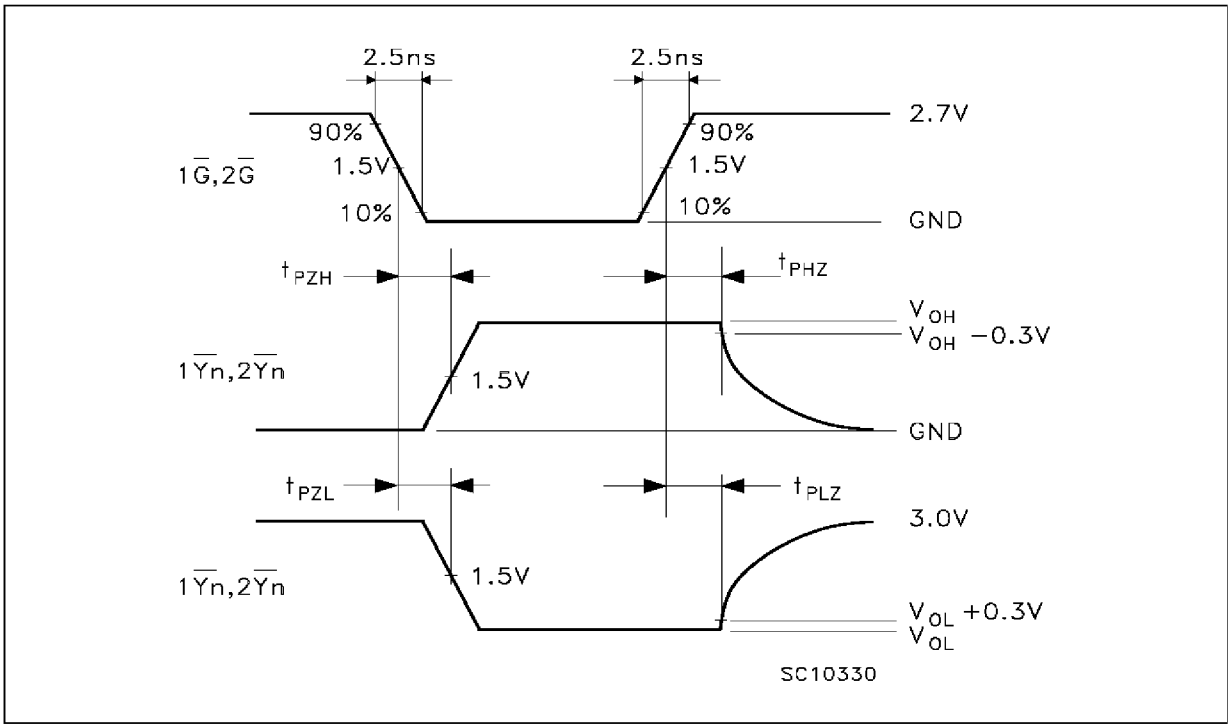

SO20 MECHANICAL DATA

DIM.	mm			inch		
	MIN.	TYP.	MAX.	MIN.	TYP.	MAX.
A			2.65			0.104
a1	0.10		0.20	0.004		0.007
a2			2.45			0.096
b	0.35		0.49	0.013		0.019
b1	0.23		0.32	0.009		0.012
C		0.50			0.020	
c1	45° (typ.)					
D	12.60		13.00	0.496		0.512
E	10.00		10.65	0.393		0.419
e		1.27			0.050	
e3		11.43			0.450	
F	7.40		7.60	0.291		0.299
L	0.50		1.27	0.19		0.050
M			0.75			0.029
S	8° (max.)					

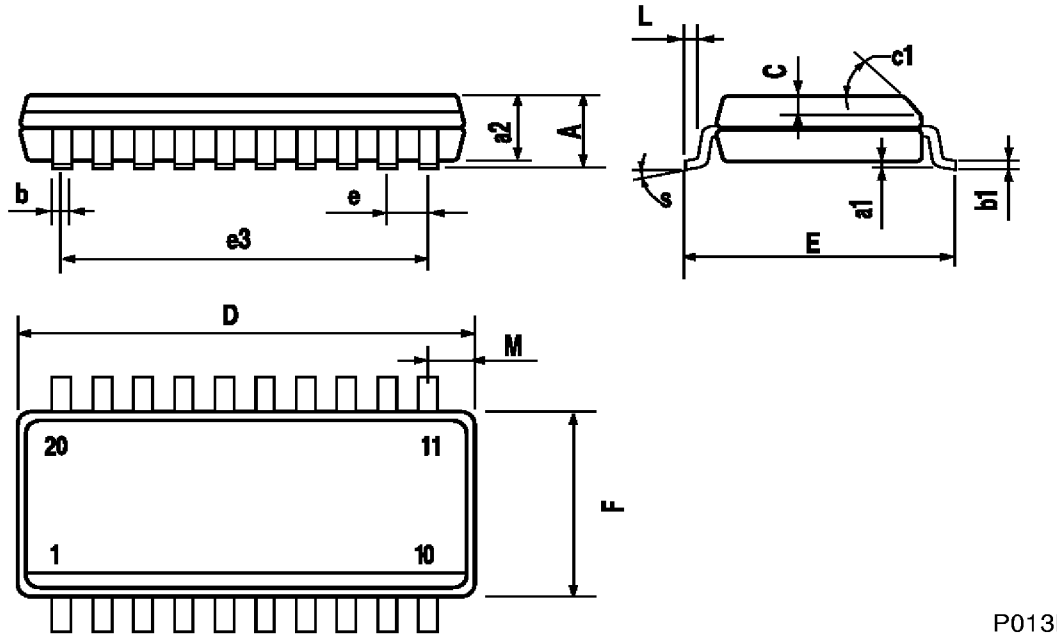

P013L

TSSOP20 MECHANICAL DATA

DIM.	mm			inch		
	MIN.	TYP.	MAX.	MIN.	TYP.	MAX.
A			1.1			0.433
A1	0.05	0.10	0.15	0.002	0.004	0.006
A2	0.85	0.9	0.95	0.335	0.354	0.374
b	0.19		0.30	0.0075		0.0118
c	0.09		0.2	0.0035		0.0079
D	6.4	6.5	6.6	0.252	0.256	0.260
E	6.25	6.4	6.5	0.246	0.252	0.256
E1	4.3	4.4	4.48	0.169	0.173	0.176
e		0.65 BSC			0.0256 BSC	
K	0°	4°	8°	0°	4°	8°
L	0.50	0.60	0.70	0.020	0.024	0.028