SGS-THOMSON MICROELECTRONICS

74LCX16374

LOW VOLTAGE 16-BIT D-TYPE FLIP FLOP 3-STATE WITH 5V TOLERANT INPUTS AND OUTPUTS

PRELIMINARY DATA

- 5V TOLERANT INPUTS AND OUTPUTS
- HIGH SPEED:
  f_{MAX} = 170 MHz (MIN.) at V_{CC} = 3V
- POWER-DOWN PROTECTION ON INPUTS AND OUTPUTS
- SYMMETRICAL OUTPUT IMPEDANCE:
  $|I_{OH}| = I_{OL}$ = 24 mA (MIN)
- PCI BUS LEVELS GUARANTEED AT 24mA
- BALANCED PROPAGATION DELAYS:
  $t_{PLH} \cong t_{PHL}$
- OPERATING VOLTAGE RANGE:
  V_{CC} (OPR) = 2.0V to 3.6V (1.5V Data Retention)
- PIN AND FUNCTION COMPATIBLE WITH 74 SERIES 16374
- LATCH-UP PERFORMANCE EXCEEDS 500mA
- ESD PERFORMANCE:
  HBM >2000V; MM > 200V

T
(TSSOP48 Package)

ORDER CODES :
74LCX16374T

DESCRIPTION

The LCX16374 is a low voltage CMOS 16-BIT D-TYPE FLIP FLOP with 3 STATE OUTPUT NON INVERTING fabricated with sub-micron silicon gate and double-layer metal wiring C^2MOS technology. It is ideal for low power and high speed applications; it can be interfaced to 5V signal enviroment for both inputs and outputs.

These 16 bit D-Type flip-flops are controlled by two clock inputs (nCK) and two output enable inputs ($n\overline{OE}$).

On the positive transition of the (nCK), the nQ outputs will be set to the logic state that were setup at the nD inputs.

While the ($n\overline{OE}$) input is low, the 8 outputs (nQ) will be in a normal state (high or low logic level) and while high level the outputs will be in a high impedance state.

Any output control does not affect the internal operation of flip flops; that is, the old data can be retained or the new data can be entered even while the outputs are off.

It has better speed performance at 3.3V than 5V LSTTL family combined with the true CMOS low power consumption.

All inputs and outputs are equipped with protection circuits against static discharge, giving them 2KV ESD immunity and transient excess voltage.

PIN CONNECTION

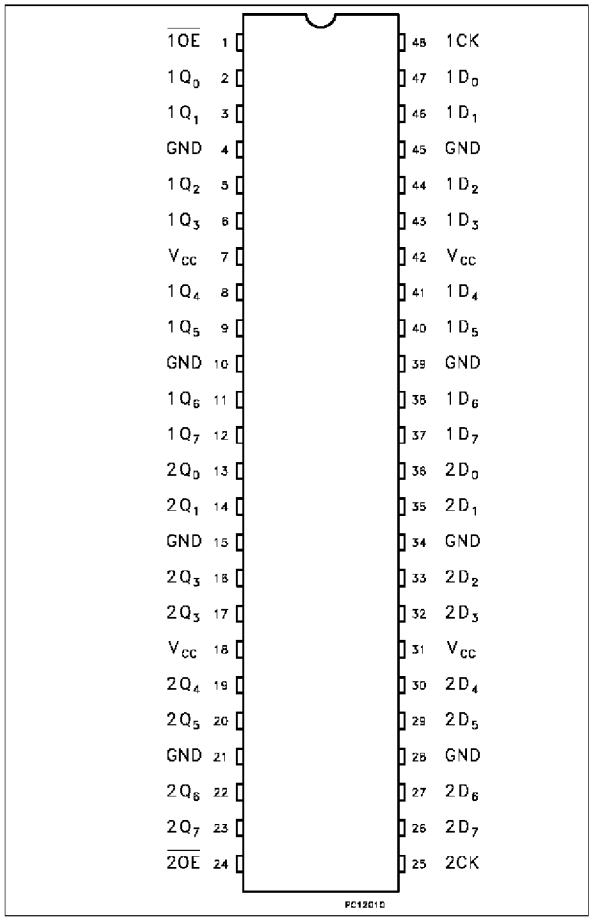

INPUT AND OUTPUT EQUIVALENT CIRCUIT

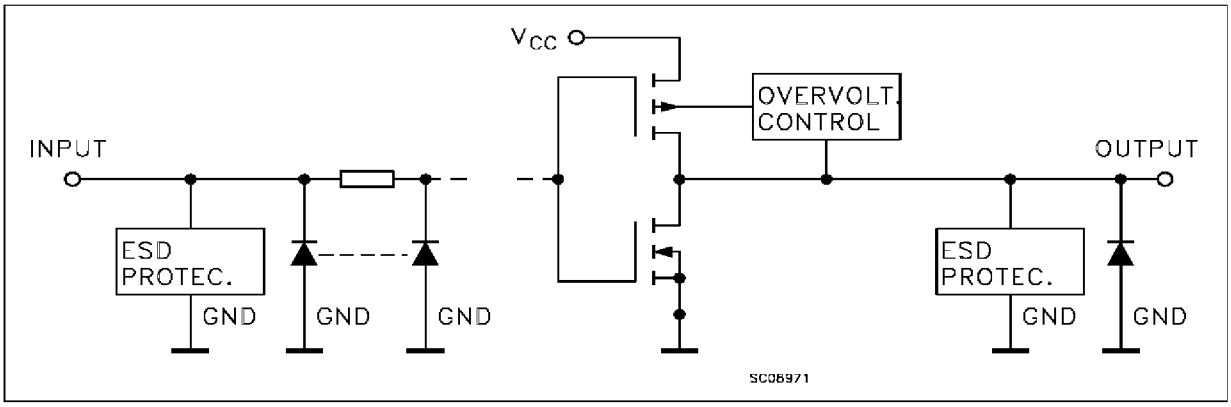

PIN DESCRIPTION

PIN No	SYMBOL	NAME AND FUNCTION
1	$\overline{1OE}$	3 State Output Enable Input (Active LOW)
2, 3, 5, 6, 8, 9, 11, 12	1Q0 to 1Q7	Data Inputs
13, 14, 16, 17, 19, 20, 22, 23	2Q0 to 2Q7	Data Inputs
24	$\overline{2OE}$	3 State Output Enable Input (Active LOW)
25	2CK	Clock Input (LOW to HIGH, edge triggered)
36, 35, 33, 32, 30, 29, 27, 26	2D0 to 2D7	3 State Outputs
47, 46, 44, 43, 41, 40, 38, 37	1D0 to 1D7	3 State Outputs
48	1CK	Clock Input (LOW to HIGH, edge triggered)
4, 10, 15, 21, 28, 34, 39, 45	GND	Ground (0V)
7, 18, 31, 42	V_{CC}	Positive Supply Voltage

TRUTH TABLE

INPUTS			OUTPUTS
$\overline{OE}$	CK	D	Q
H	X	X	Z
L	↓	X	NO CHANGE
L	↑	L	L
L	↑	H	H

IEC LOGIC SYMBOLS

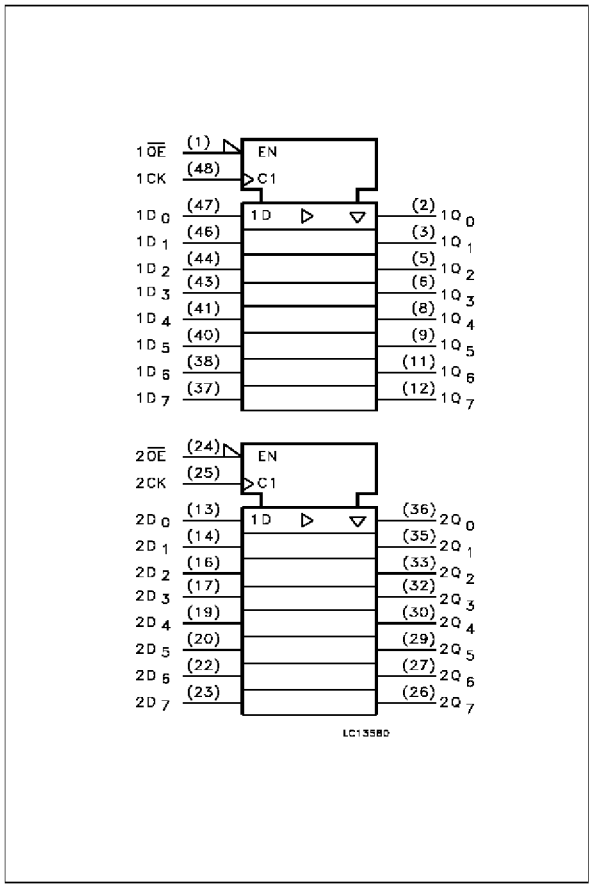

LOGIC DIAGRAM

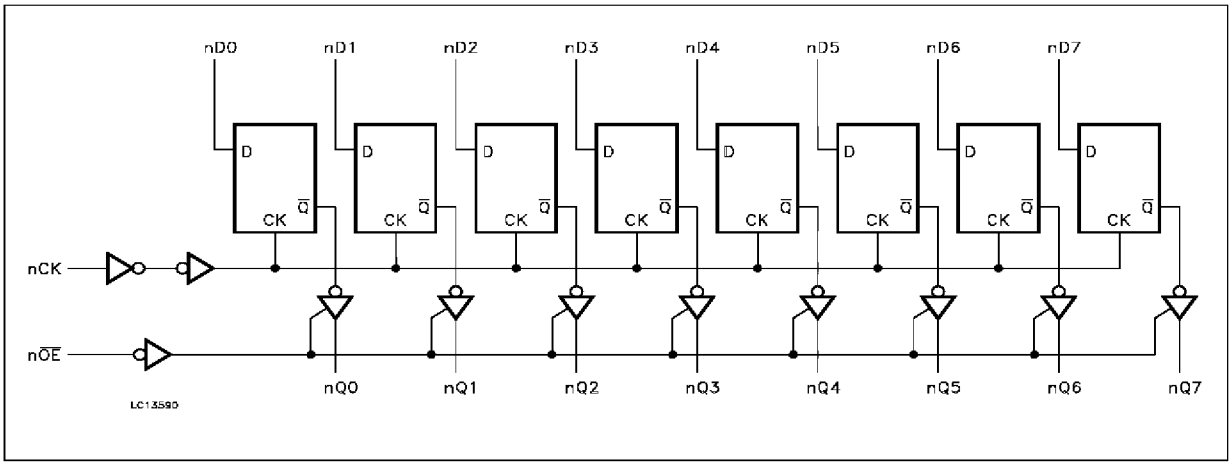

ABSOLUTE MAXIMUM RATINGS

Symbol	Parameter	Value	Unit
V_{CC}	Supply Voltage	-0.5 to + 7.0	V
V_I	DC Input Voltage	-0.5 to + 7.0	V
V_O	DC Output Voltage (OFF state)	-0.5 to + 7.0	V
V_O	DC Output Voltage (High or Low State) (note1)	-0.5 to V_{CC} + 0.5	V
I_{IK}	DC Input Diode Current	- 50	mA
I_{OK}	DC Output Diode Current (note2)	± 50	mA
I_O	DC Output Source/Sink Current	± 50	mA
I_{CC} or I_{GND}	DC V_{CC} or Ground Current Per Supply Pin	± 100	mA
T_{stg}	Storage Temperature	-65 to +150	°C
T_L	Lead Temperature (10 sec)	300	°C

Absolute Maximum Ratings are those values beyond which damage to the device may occur. Functional operation under these condition is not implied.
1) I_O absolute maximum rating must be observed
2) V_O < GND, V_O > V_{CC}

RECOMMENDED OPERATING CONDITIONS

Symbol	Parameter	Value	Unit
V_{CC}	Supply Voltage (note 1)	2.0 to 3.6	V
V_I	Input Voltage	0 to 5.5	V
V_O	Output Voltage (OFF state)	0 to 5.5	V
V_O	Output Voltage (High or Low State)	0 to V_{CC}	V
I_{OH}, I_{OL}	High or Low Level Output Current (V_{CC} = 3.0 to 3.6V)	± 24	mA
I_{OH}, I_{OL}	High or Low Level Output Current (V_{CC} = 2.7 to 3.0V)	± 12	mA
T_{op}	Operating Temperature:	-40 to +85	°C
dt/dv	Input Transition Rise or Fall Rate (V_{CC} = 3.0V) (note 2)	0 to 10	ns/V

1) Truth Table guaranteed: 1.5V to 3.6V
2) V_{IN} from 0.8V to 2.0V

DC SPECIFICATIONS

Symbol	Parameter	Test Conditions			Value		Unit
		V_{CC} (V)			-40 to 85 °C		
					Min.	Max.	
V_{IH}	High Level Input Voltage	2.7 to 3.6			2.0		V
V_{IL}	Low Level Input Voltage					0.8	V
V_{OH}	High Level Output Voltage	2.7 to 3.6	$V_I = V_{IH}$ or V_{IL}	I_O=-100 µA	V_{CC}-0.2		V
		2.7		I_O=-12 mA	2.2		
		3.0		I_O=-18 mA	2.4		
				I_O=-24 mA	2.2		
V_{OL}	Low Level Output Voltage	2.7 to 3.6	$V_I = V_{IH}$ or V_{IL}	I_O=100 µA		0.2	V
		2.7		I_O=12 mA		0.4	
		3.0		I_O=16 mA		0.4	
		3.0		I_O=24 mA		0.55	
I_I	Input Leakage Current	2.7 to 3.6	V_I = 0 to 5.5 V			±5	µA
I_{OZ}	3 State Output Leakage Current	2.7 to 3.6	$V_I = V_{IH}$ or V_{IL} V_O = 0 to 5.5V			±5	µA
I_{off}	Power Off Leakage Current	0	V_I or V_O = 5.5V (per pin)			10	µA
I_{CC}	Quiescent Supply Current	2.7 to 3.6	$V_I = V_{CC}$ or GND			20	µA
			V_I or V_O = 3.6 to 5.5V			±20	
ΔI_{CC}	ICC incr. per input	2.7 to 3.6	$V_{IH} = V_{CC}$ -0.6V			500	µA

DYNAMIC SWITCHING CHARACTERISTICS

Symbol	Parameter	Test Conditions		Value			Unit
		V_{CC} (V)		T_A = 25 °C			
				Min.	Typ.	Max.	
V_{OLP}	Dynamic Low Voltage Quiet Output (note 1)	3.3	C_L = 50 pF V_{IL} = 0 V V_{IH} = 3.3V		0.8		V
V_{OLV}					-0.8		

1) Number of outputs defined as "n". Measured with "n-1" outputs switching from HIGH to LOW or LOW to HIGH. The remaining output is measured in the LOW state.

AC ELECTRICAL CHARACTERISTICS (C_L = 50 pF, R_L = 500 Ω, Input t_r = t_f = 2.5 ns)

Symbol	Parameter	Test Condition		Value		Unit
		V_{CC} (V)	Waveform	-40 to 85 °C		
				Min.	Max.	
t_{PLH} t_{PHL}	Propagation Delay Time	2.7	1	1.5	6.5	ns
		3.0 to 3.6		1.5	6.2	
t_{PZL} t_{PZH}	Output Enable Time to HIGH and LOW level	2.7	2	1.5	6.3	ns
		3.0 to 3.6		1.5	6.1	
t_{PLZ} t_{PHZ}	Output Disable Time from HIGh and LOW level	2.7	2	1.5	6.2	ns
		3.0 to 3.6		1.5	6.0	
t_s	Setup Time, HIGh or LOW level Dn to CP	2.7	1	2.5		ns
		3.0 to 3.6		2.5		
t_h	Hold Time, HIGh or LOW level Dn to CP	2.7	1	1.5		ns
		3.0 to 3.6		1.5		
t_w	CP Pulse Width, HIGH or LOW	2.7	3	3.0		ns
		3.0 to 3.6		3.0		
f_{MAX}	Clock Pulse Frequency	3.0 to 3.6	1	170		MHz
t_{OSLZ} t_{OSHL}	Output to Output Skew Time (note 1, 2)	3.0 to 3.6			1.0	ns

1) Skew is defined as the absolute value of the difference between the actual propagation delay for any two outputs of the same device switching in the same direction, either HIGH or LOW ($t_{OSLH} = |t_{PLHm} - t_{PLHn}|$, $t_{OSHL} = |t_{PHLm} - t_{pHLn}|$)
2) Parameter guaranteed by design

CAPACITIVE CHARACTERISTICS

Symbol	Parameter	Test Conditions		Value			Unit
		V_{CC} (V)		T_A = 25 °C			
				Min.	Typ.	Max.	
C_{IN}	Input Capacitance	3.3	V_{IN} = 0 to V_{CC}		7		pF
C_{OUT}	Output Capacitance	3.3	V_{IN} = 0 to V_{CC}		8		pF
C_{PD}	Power Dissipation Capacitance (note 1)	3.3	f_{IN} = 10MHz V_{IN} = 0 or V_{CC}		20		pF

1) C_{PD} is defined as the value of the IC's internal equivalent capacitance which is calculated from the operating current consumption without load. Average operting current can be obtained by the following equation. $I_{CC}(opr) = C_{PD} \bullet V_{CC} \bullet f_{IN} + I_{CC}/n$ (per circuit)

TEST CIRCUIT

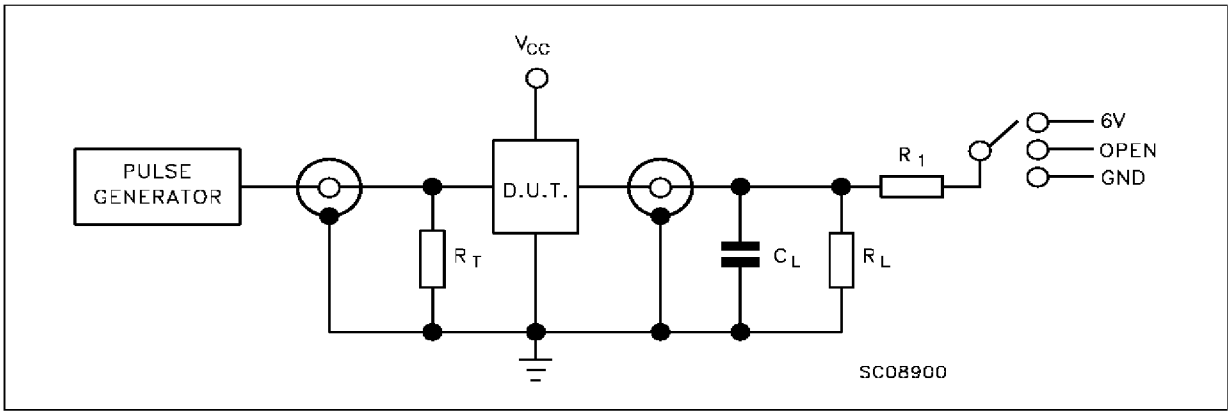

TEST	SWITCH
t_{PLH}, t_{PHL}	Open
t_{PZL}, t_{PLZ}	6V
t_{PZH}, t_{PHZ}	GND

C_L = 50 pF or equivalent (includes jig and probe capacitance)
$R_L = R_1$ = 500Ω or equivalent
$R_T = Z_{OUT}$ of pulse generator (typically 50Ω)

WAVEFORM 1: PROPAGATION DELAYS, SETUP AND HOLD TIMES (f=1MHz; 50% duty cicle)

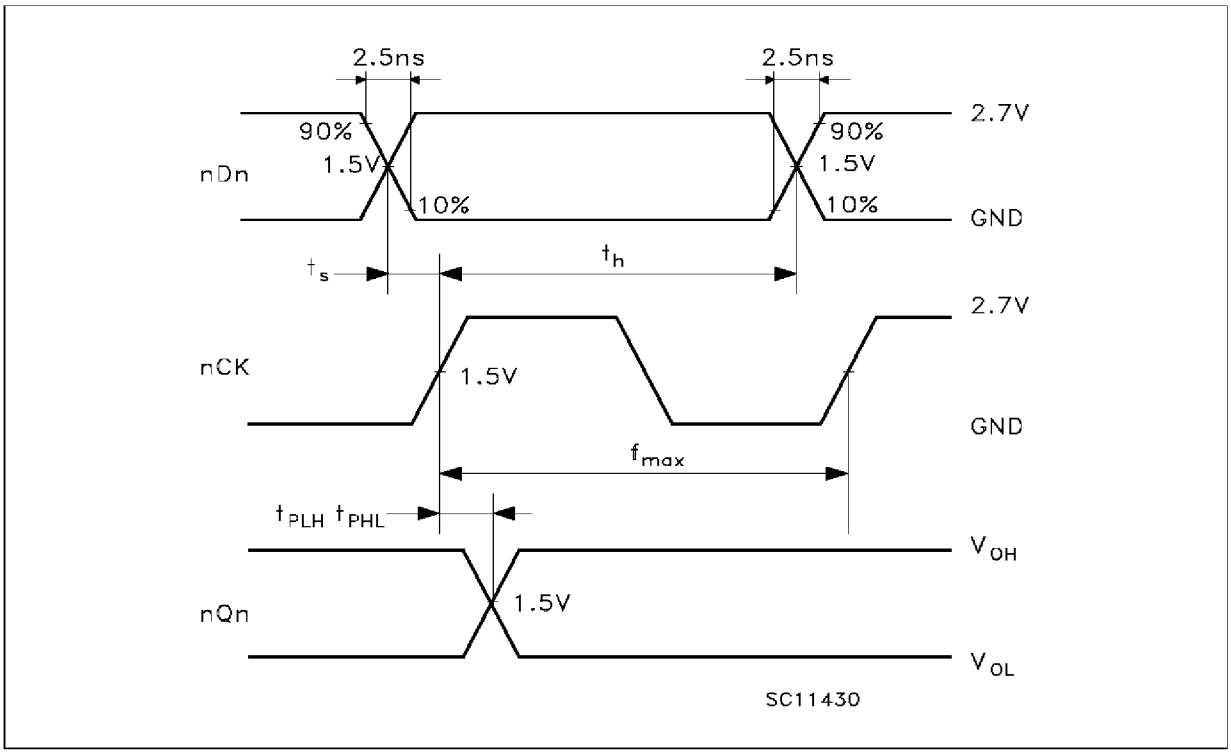

WAVEFORM 2: OUTPUT ENABLE AND DISABLE TIMES (f=1MHz; 50% duty cicle)

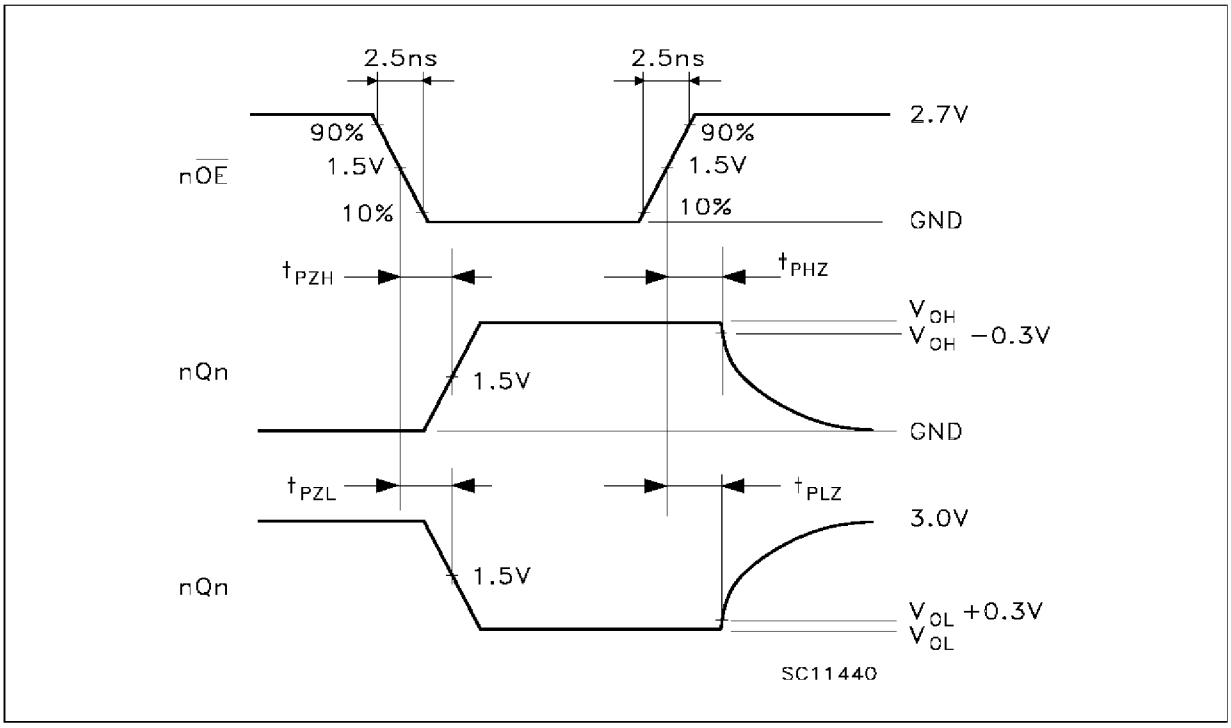

WAVEFORM 3: PULSE WIDTH

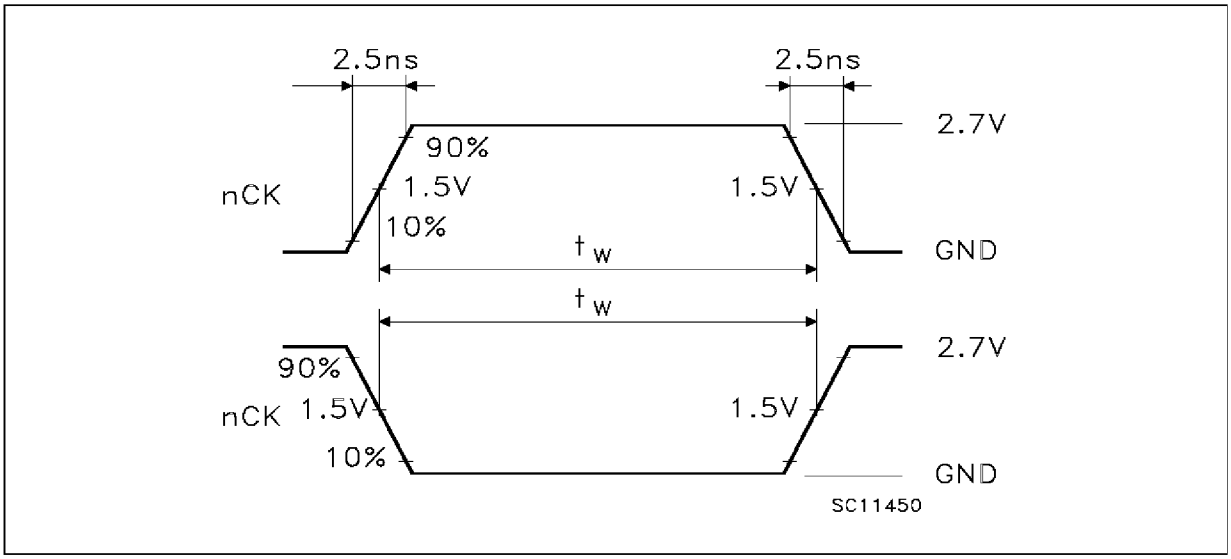

TSSOP48 MECHANICAL DATA

DIM.	mm			inch		
	MIN.	TYP.	MAX.	MIN.	TYP.	MAX.
A			1.1			0.433
A1	0.05	0.10	0.15	0.002	0.004	0.006
A2	0.85	0.9	0.95	0.335	0.354	0.374
b	0.17		0.27	0.0067		0.011
c	0.09		0.20	0.0035		0.0079
D	12.4	12.5	12.6	0.408	0.492	0.496
E	7.95	8.1	8.25	0.313	0.319	0.325
E1	6.0	6.1	6.2	0.236	0.240	0.244
e		0.5 BSC			0.0197 BSC	
K	0°	4°	8°	0°	4°	8°
L	0.50	0.60	0.70	0.020	0.024	0.028