ICL76XX/D, ICL76XX/W

INTERSIL

ORDERING INFORMATION

Part Number	Temperature	Form
ICL7611D/D	+25°C	Dice
ICL7612D/D	+25°C	Dice
ICL7621D/D	+25°C	Dice
ICL7631E/D	+25°C	Dice
ICL7641E/D	+25°C	Dice
ICL7642E/D	+25°C	Dice
ICL7611D/W	+25°C	Wafer
ICL7612D/W	+25°C	Wafer
ICL7621D/W	+25°C	Wafer
ICL7631E/W	+25°C	Wafer
ICL7641E/W	+25°C	Wafer
ICL7642E/W	+25°C	Wafer

Basic Part Number	Number of Op Amps	Special Features
ICL7611D ICL7612D	Single	C, O, P C, O, P, V
ICL7621D	Dual	C, M
ICL7631E	Triple	C, P
ICL7641E ICL7642E	Quad	C, H C, L

Special Feature Codes

C = Internally Compensated
E = Externally Compensated
H = High Quiescent Current (1 mA)
I = Input Protected to ±200V
L = Low Quiescent Current (10 μA)
M = Medium Quiescent Current (100 μA)
O = Offset Null Capability
P = Programmable Quiescent Current
V = Extended CMVR

NOTE: All typical values have been characterized but are not tested.

ABSOLUTE MAXIMUM RATINGS

Total Supply Voltage V^+ to V^- 18V

Input Voltage ..... V^- − 0.3V to V^+ + 0.3V

Differential Input Voltage
(Note 1) ..... ± [(V^+ + 0.3) − (V^- − 0.3)]V

Duration of Output Short Circuit (Note 2) ..... Unlimited

NOTE: *Stresses above those listed under "Absolute Maximum Ratings" may cause permanent damage to the device. These are stress ratings only and functional operation of the device at these or any other conditions above those indicated in the operational sections of the specifications is not implied. Exposure to absolute maximum rating conditions for extended periods may affect device reliability.*

NOTE 1: Long term offset voltage stability will be degraded if large input differential voltages are applied for long periods of time.

2: The outputs may be shorted to ground or to either supply. For $V_{SUPP} \leq$ 10V. Care must be taken to insure that the dissipation rating is not exceeded.

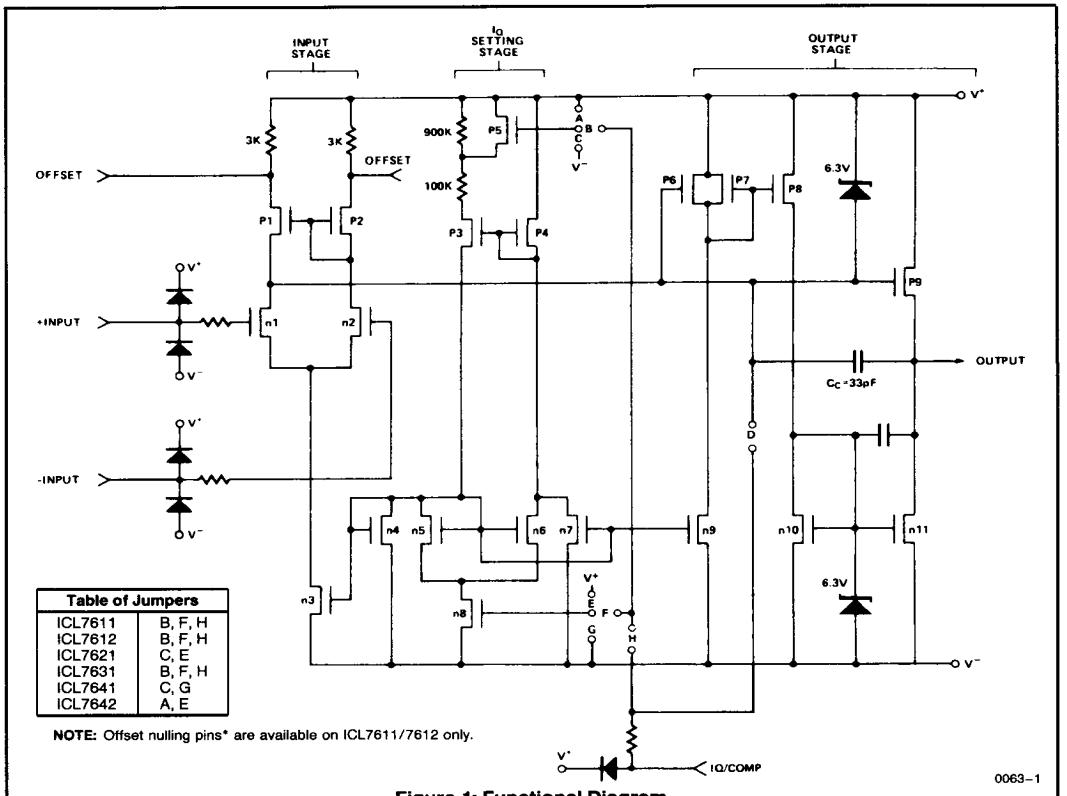

Table of Jumpers	
ICL7611	B, F, H
ICL7612	B, F, H
ICL7621	C, E
ICL7631	B, F, H
ICL7641	C, G
ICL7642	A, E

NOTE: Offset nulling pins* are available on ICL7611/7612 only.

Figure 1: Functional Diagram

NOTE: All typical values have been characterized but are not tested.

ICL76XX/D, ICL76XX/W

INTERSIL

CHIP TOPOGRAPHIES

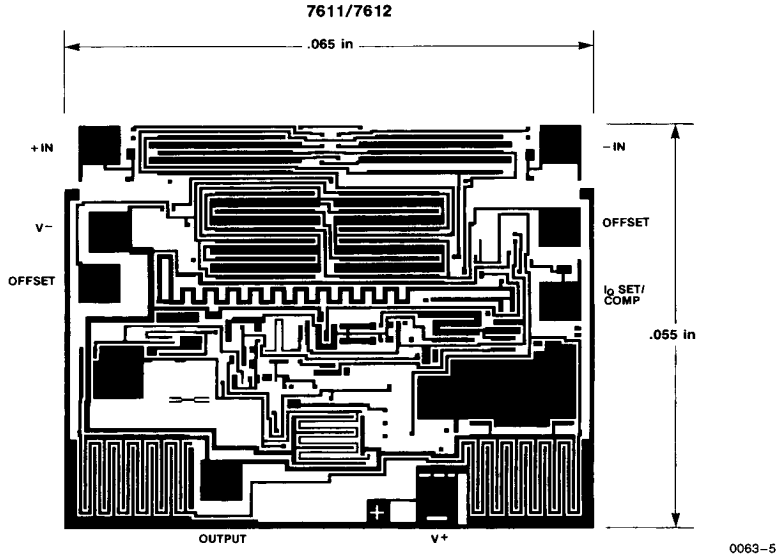

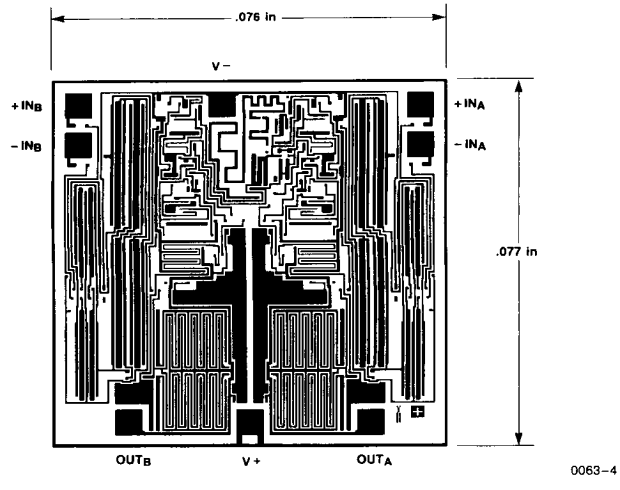

Pad size = 0.005 x 0.005 in.

Figure 2

NOTE: All typical values have been characterized but are not tested.

CHIP TOPOGRAPHIES (Continued)

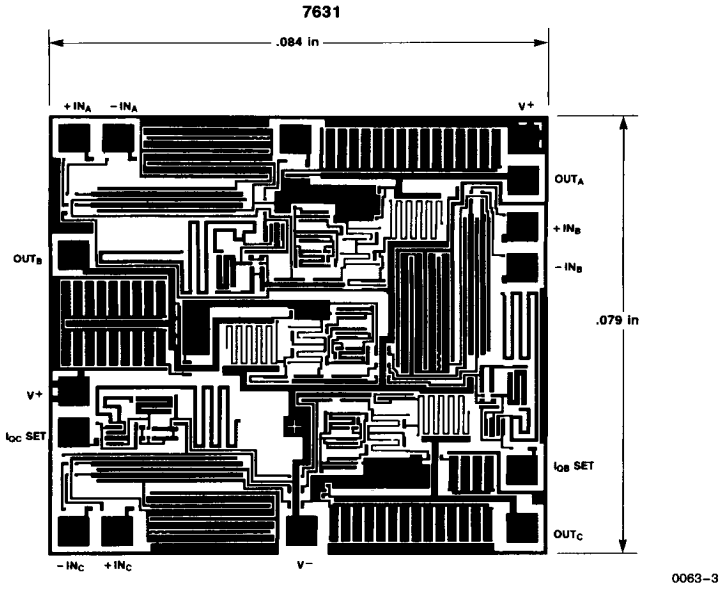

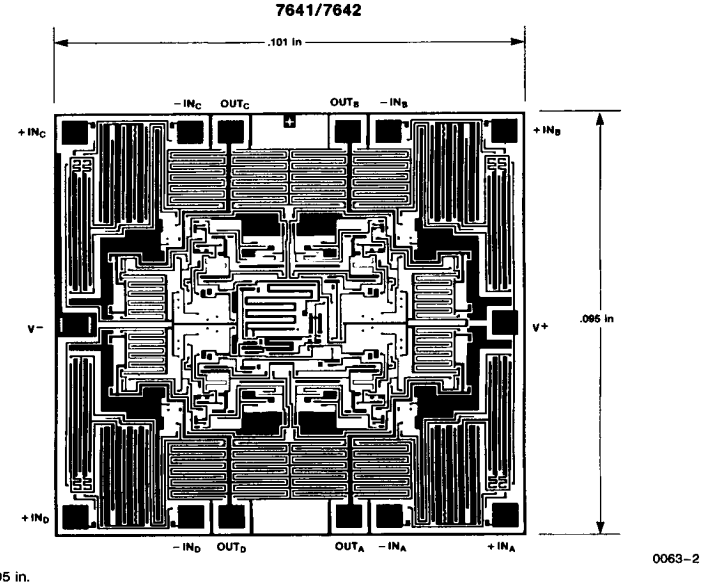

Pad size = 0.005 x 0.005 in.

Figure 3

NOTE: All typical values have been characterized but are not tested.

ICL76XX/D, ICL76XX/W

INTERSIL

ELECTRICAL CHARACTERISTICS (7611, 7612, 7621 only) V_{SUPPLY} = ±5.0V, T_A = 25°C

Symbol	Parameter	Test Conditions	76XXD Min	76XXD Typ	76XXD Max	Units
V_{OS}	Input Offset Voltage	$R_S \leq 100\ k\Omega$			15	mV
I_{OS}	Input Offset Current			15		pA
I_{BIAS}	Input Bias Current			25		pA
V_{CMR}	Common Mode Voltage Range (Except ICL7612)	I_Q = 10 μA (7611/7612) I_Q = 100 μA I_Q = 1 mA (7611/7612)	±4.4 ±4.2 ±3.7			V
V_{CMR}	Extended Common Mode Voltage Range (ICL7612 Only)	I_Q = 10 μA	±5.3			V
		I_Q = 100 μA	+5.3 −5.1			
		I_Q = 1 mA	+5.3 −4.5			
V_{OUT}	Output Voltage Swing	I_Q = 10 μA, R_L = 1 MΩ (7611/7612)	±4.9			V
		I_Q = 100 μA, R_L = 100 kΩ	±4.9			
A_{VOL}	Large Signal Voltage Gain	V_O = ±4.0V, R_L = 10 kΩ I_Q = 1 mA (7611/7612)	76	83		dB
GBW	Unity Gain Bandwidth	I_Q = 10 μA (7611/7612) I_Q = 100 μA I_Q = 1 mA (7611/7612)		0.044 0.48 1.4		MHz
R_{IN}	Input Resistance			10^{12}		Ω
CMRR	Common Mode Rejection Ratio	$R_S \leq 100\ k\Omega$, I_Q = 10 μA (7611/7612) $R_S \leq 100\ k\Omega$, I_Q = 100 μA $R_S \leq 100\ k\Omega$, I_Q = 1 mA (7611/7612)	70	91		dB
PSRR	Power Supply Rejection Ratio	$R_S \leq 100\ k\Omega$, I_Q = 100 μA	80	86		dB
I_{SUPPLY}	Supply Current (Per Amplifier)	No Signal, No Load I_Q SET = +5V (7611/7612) I_Q SET = 0V I_Q SET = −5V (7611/7612)		 0.01 0.1 1.0	 0.02 0.25 2.5	mA
SR	Slew Rate	A_{VOL} = 1, C_L = 100 pF V_{IN} = 8 V_{p-p} I_Q = 10 μA (7611/7612), R_L = 1 MΩ I_Q = 100 μA, R_L = 100 kΩ I_Q = 1 mA (7611/7612), R_L = 10 kΩ		 0.016 0.16 1.6		V/μs
t_r	Rise Time	V_{IN} = 50 mV, C_L = 100 pF I_Q = 10 μA (7611/7612), R_L = 1 MΩ I_Q = 100 μA, R_L = 100 kΩ I_Q = 1 mA (7611/7612), R_L = 10 kΩ		 20 2 0.9		μs
	Overshoot Factor	V_{IN} = 50 mV, C_L = 100 pF I_Q = 10 μA (7611/7612), R_L = 1 MΩ I_Q = 100 μA, R_L = 100 kΩ I_Q = 1 mA (7611/7612), R_L = 10 kΩ		 5 10 40		%

NOTE: All typical values have been characterized but are not tested.

ELECTRICAL CHARACTERISTICS (7631, 7641, 7642 only) V_{SUPPLY} = ±5.0V, T_A = 25°C

Symbol	Parameter	Test Conditions	76XXE Min	76XXE Typ	76XXE Max	Units
V_{OS}	Input Offset Voltage	$R_S \leq 100\ k\Omega$			20	mV
I_{OS}	Input Offset Current			15		pA
I_{BIAS}	Input Bias Current			25		pA
V_{CMR}	Common Mode Voltage Range	$I_Q = 10\ \mu A$ (7631/7642) $I_Q = 100\ \mu A$ (7631) $I_Q = 1$ mA (7631/7641)	±4.4 ±4.2 ±3.7			V
V_{OUT}	Output Voltage Swing	$I_Q = 10\ \mu A$, $R_L = 1\ M\Omega$ (7631/7642) $I_Q = 100\ \mu A$, $R_L = 100\ k\Omega$ (7631) $I_Q = 1$ mA, $R_L = 10\ k\Omega$ (7631/7641)	±4.9 ±4.9 ±4.5			V
A_{VOL}	Large Signal Voltage Gain	$V_O = \pm 4.0V$, $R_L = 1\ M\Omega$ (7631/7642) $I_Q = 10\ \mu A$	80	104		
		$V_O = \pm 4.0V$, $R_L = 100\ k\Omega$ (7631) $I_Q = 100\ \mu A$	80	102		
		$V_O = \pm 4.0V$, $R_L = 10\ k\Omega$ (7631/7641) $I_Q = 1$ mA	80	98		
GBW	Unity Gain Bandwidth	$I_Q = 10\ \mu A$ (7631/7642) $I_Q = 100\ \mu A$ (7631) $I_Q = 1$ mA (7631/7641)		0.044 0.48 1.4		MHz
R_{IN}	Input Resistance		10^{12}			Ω
CMRR	Common Mode Rejection Ratio	$R_S \leq 100\ k\Omega$, $I_Q = 10\ \mu A$ (7631/7642) $R_S \leq 100\ k\Omega$, $I_Q = 100\ \mu A$ (7631) $R_S \leq 100\ k\Omega$, $I_Q = 1$ mA (7631/7641)	70 70 60	96 91 87		dB
PSRR	Power Supply Rejection Ratio	$R_S \leq 100\ k\Omega$, $I_Q = 10\ \mu A$ (7631/7642) $R_S \leq 100\ k\Omega$, $I_Q = 100\ \mu A$ (7631) $R_S \leq 100\ k\Omega$, $I_Q = 1$ mA (7631/7641)	80 80 70	94 86 77		dB
I_{SUPPLY}	Supply Current (Per Amplifier)	No Signal, No Load (7642 Only) $I_Q = 10\ \mu A$ (7631/7642) $I_Q = 100\ \mu A$ (7631) $I_Q = 1$ mA (7631/7641)		0.01 0.01 0.1 1.0	0.03 0.022 0.25 2.5	mA
V_{O1}/V_{O2}	Channel Separation	$A_{VOL} = 100$		120		dB
SR	Slew Rate	$A_{VOL} = 1$, $C_L = 100$ pF $V_{IN} = 8\ V_{p-p}$ $I_Q = 10\ \mu A$ (7631/7642), $R_L = 1\ M\Omega$ $I_Q = 100\ \mu A$ (7631), $R_L = 100\ k\Omega$ $I_Q = 1$ mA (7631/7641), $R_L = 10\ k\Omega$		 0.016 0.16 1.6		V/µs
t_r	Rise Time	$V_{IN} = 50$ mV, $C_L = 100$ pF $I_Q = 10\ \mu A$ (7631/7642), $R_L = 1\ M\Omega$ $I_Q = 100\ \mu A$ (7631), $R_L = 100\ k\Omega$ $I_Q = 1$ mA (7631/7641), $R_L = 10\ k\Omega$		 20 2 0.9		µs
	Overshoot Factor	$V_{IN} = 50$ mV, $C_L = 100$ pF $I_Q = 10\ \mu A$ (7631/7642), $R_L = 1\ M\Omega$ $I_Q = 100\ \mu A$, (7631), $R_L = 100\ k\Omega$ $I_Q = 1$ mA (7631/7641), $R_L = 10\ k\Omega$		 5 10 40		%

NOTE: All typical values have been characterized but are not tested.