M74HC367

HEX BUS BUFFER WITH 3 STATE OUTPUT NON INVERTING

- HIGH SPEED: t_{PD} = 11ns (TYP.) at V_{CC} = 5V
- LOW POWER DISSIPATION: I_{CC} = 4µA(MAX.) at T_A=25°C
- HIGH NOISE IMMUNITY: $V_{NIH} = V_{NIL}$ = 28 % V_{CC} (MIN.)
- SYMMETRICAL OUTPUT IMPEDANCE: $|I_{OH}| = I_{OL}$ = 6mA (MIN)
- BALANCED PROPAGATION DELAYS: $t_{PLH} \cong t_{PHL}$
- OUTPUTS DRIVE CAPABILITY 15 LSTTL LOADS
- WIDE OPERATING VOLTAGE RANGE: V_{CC} (OPR) = 2V to 6V
- PIN AND FUNCTION COMPATIBLE WITH 74 SERIES 367

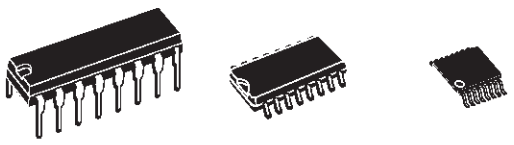

DIP SOP TSSOP

ORDER CODES

PACKAGE	TUBE	T & R
DIP	M74HC367B1R	
SOP	M74HC367M1R	M74HC367RM13TR
TSSOP		M74HC367TTR

DESCRIPTION

The M74HC367 is an high speed CMOS HEX BUS BUFFER 3-STATE OUTPUTS fabricated with silicon gate C^2MOS tecnology.

It has the same high speed performance of LSTTL combined with true CMOS low power consumption.

This device contains six buffers, four buffers are controlled by an enable input ($\overline{G1}$) and the other two buffers are controlled by the other enable input ($\overline{G2}$); the outputs of each buffer group are enabled when $\overline{G1}$ and/or $\overline{G2}$ inputs are held low, and when held high, these outputs are disabled to be high-impedance.

These outputs are capable of driving up to 15LSTTL loads.

All inputs are equipped with protection circuits against static discharge and transient excess voltage.

PIN CONNECTION AND IEC LOGIC SYMBOLS

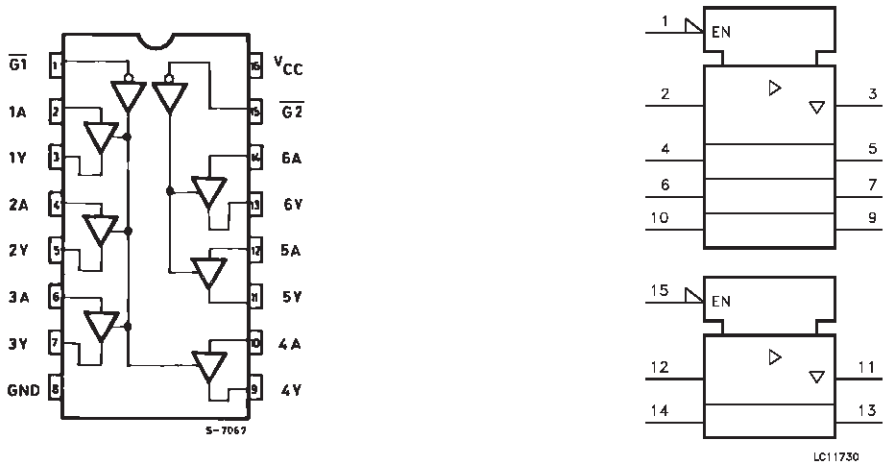

INPUT AND OUTPUT EQUIVALENT CIRCUIT

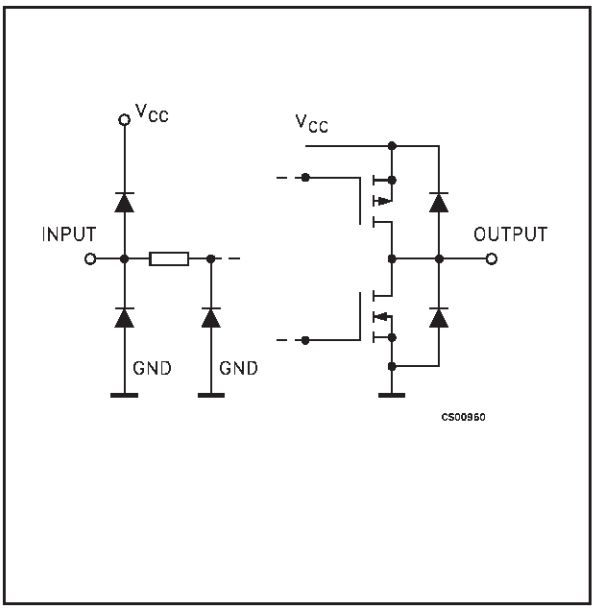

PIN DESCRIPTION

PIN No	SYMBOL	NAME QND FUNCTION
1, 15	$\overline{G1}$, $\overline{G2}$	3 State Output Enable Input
2, 4, 6, 10, 12, 14	1A to 6A	Data Inputs
3, 5, 7, 9, 11, 13	1Y to 6Y	Data Outputs
8	GND	Ground (0V)
16	V_{CC}	Positive Supply Voltage

TRUTH TABLE

INPUTS		OUTPUTS
$\overline{G}$	An	Yn
L	L	L
L	H	H
H	X	Z

X: DON'T CARE, Z: HIGH IMPEDANCE

ABSOLUTE MAXIMUM RATINGS

Symbol	Parameter	Value	Unit
V_{CC}	Supply Voltage	-0.5 to +7	V
V_I	DC Input Voltage	-0.5 to V_{CC} + 0.5	V
V_O	DC Output Voltage	-0.5 to V_{CC} + 0.5	V
I_{IK}	DC Input Diode Current	± 20	mA
I_{OK}	DC Output Diode Current	± 20	mA
I_O	DC Output Current	± 35	mA
I_{CC} or I_{GND}	DC V_{CC} or Ground Current	± 70	mA
P_D	Power Dissipation	500(*)	mW
T_{stg}	Storage Temperature	-65 to +150	°C
T_L	Lead Temperature (10 sec)	300	°C

Absolute Maximum Rating are those value beyond which damage to the device may occour. Functional operation under these condition is not implied
(*) 500mW at 65 °C; derate to 300mW by 10mW/°C from 65°C to 85°C

RECOMMENDED OPERATING CONDITIONS

Symbol	Parameter		Value	Unit
V_{CC}	Supply Voltage		2 to 6	V
V_I	Input Voltage		0 to V_{CC}	V
V_O	Output Voltage		0 to V_{CC}	V
T_{op}	Operating Temperqture		-40 to 85	°C
t_r, t_f	Input Rise and Fall Time	V_{CC} = 2.0V	0 to 1000	ns
		V_{CC} = 4.5V	0 to 500	ns
		V_{CC} = 6.0V	0 to 400	ns

DC SPECIFICATION

Symbol	Parameter	Test Condition		Value					Unit
		V_{CC} (V)		T_A = 25 °C			-40 to 85 °C		
				Min.	Typ.	Max.	Min.	Max.	
V_{IH}	High Level Input Voltage	2.0		1.5			1.5		V
		4.5		3.15			3.15		
		6.0		4.2			4.2		
V_{IL}	Low Level Input Voltage	2.0				0.5		0.5	V
		4.5				1.35		1.35	
		6.0				1.8		1.8	
V_{OH}	High Level Ouput Voltage	2.0	I_O=-20 µA	1.9	2.0		1.9		V
		4.5	I_O=-20 µA	4.4	4.5		4.4		
		6.0	I_O=-20 µA	5.9	6.0		5.9		
		4.5	I_O=-6 mA	4.18	4.31		4.13		
		6.0	I_O=-7.8 mA	5.68	5.8		5.63		
V_{OL}	Low Level Output Voltage	2.0	I_O=20 µA		0.0	0.1		0.1	V
		4.5	I_O=20 µA		0.0	0.1		0.1	
		6.0	I_O=20 µA		0.0	0.1		0.1	
		4.5	I_O=6 mA		0.17	0.26		0.33	
		6.0	I_O=7.8 mA		0.18	0.26		0.33	
I_I	Input Leakage Current	6.0	V_I = V_{CC} or GND			± 0.1		± 1	µA
I_{OZ}	High Impedance Output Leakage Current	6.0	V_I = V_{IH} or V_{IL} V_O = V_{CC} or GND			± 0.5		± 5	µA
I_{CC}	Quiescent Supply Current	6.0	V_I = V_{CC} or GND			4		40	µA

AC ELECTRICAL CHARACTERISTICS (C_L = 50 pF, Input t_r = t_f = 6ns)

Symbol	Parameter	Test Condition			Value					Unit
		V_{CC} (V)	C_L (pF)		T_A = 25 °C			-40 to 85 °C		
					Min.	Typ.	Max.	Min.	Max.	
t_{TLH} t_{THL}	Output Transition Time	2.0	50			25	60		75	ns
		4.5				7	12		15	
		6.0				6	10		13	
t_{PLH} t_{PHL}	Propagation Delay Time	2.0	50			30	85		105	ns
		4.5				10	17		21	
		6.0				9	14		18	
		2.0	150			42	105		130	ns
		4.5				14	21		26	
		6.0				12	18		22	
t_{PZL} t_{PZH}	Output Enable Time	2.0	50	R_L = 1KΩ		36	90		115	ns
		4.5				11	18		23	
		6.0				9	15		20	
		2.0	150	R_L = 1KΩ		49	110		140	ns
		4.5				15	22		28	
		6.0				13	19		24	
t_{PLZ} t_{PHZ}	Output Disable Time	2.0	50	R_L = 1KΩ		32	95		120	ns
		4.5				14	19		24	
		6.0				12	16		20	

CAPACITANCE CHARACTERISTICS

Symbol	Parameter	Test Condition		Value					Unit
		V_{CC} (V)		T_A = 25 °C			-40 to 85 °C		
				Min.	Typ.	Max.	Min.	Max.	
C_{IN}	Input Capacitance				5	10		10	pF
C_{OUT}	Output Capacitance				10				pF
C_{PD}	Power Dissipation Capacitance (note 1)				33				pF

1) C_{PD} is defined as the value of the IC's internal equivalent capacitance which is calculated from the operating current consumption without load. (Refer to Test Circuit). Average current can be obtained by the following equation. $I_{CC(opr)} = C_{PD} \times V_{CC} \times f_{IN} + I_{CC}/6$ (per Channel)

TEST CIRCUIT

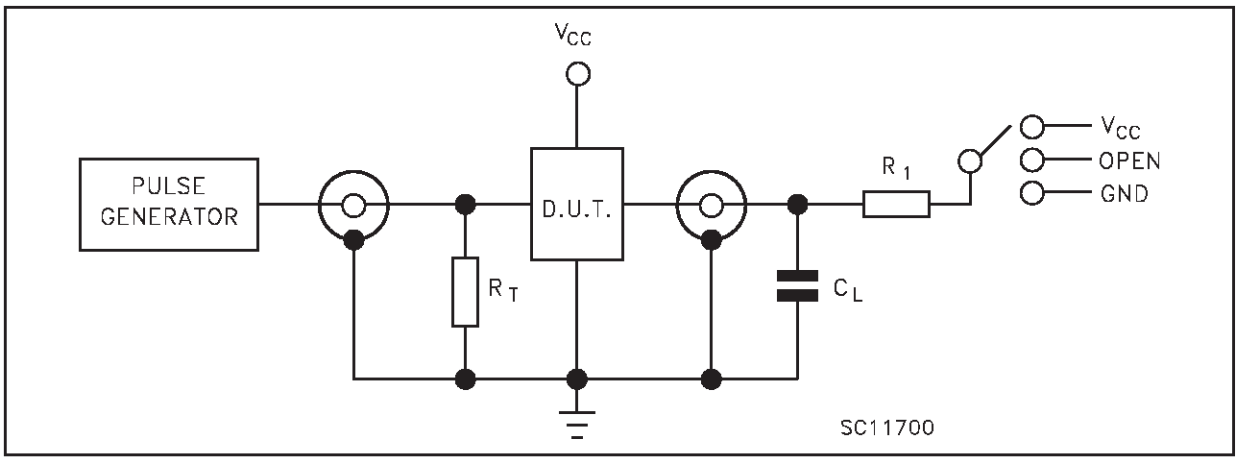

TEST	SWITCH
t_{PLH}, t_{PHL}	Open
t_{PZL}, t_{PLZ}	V_{CC}
t_{PZH}, t_{PHZ}	GND

C_L = 50pF/150pF or equivalent (includes jig and probe capacitance)
R_1 = 1KΩ or equivalent
R_T = Z_{OUT} of pulse generator (typically 50Ω)

WAVEFORM 1: OUTPUT ENABLE AND DISABLE TIMES (f=1MHz; 50% duty cycle)

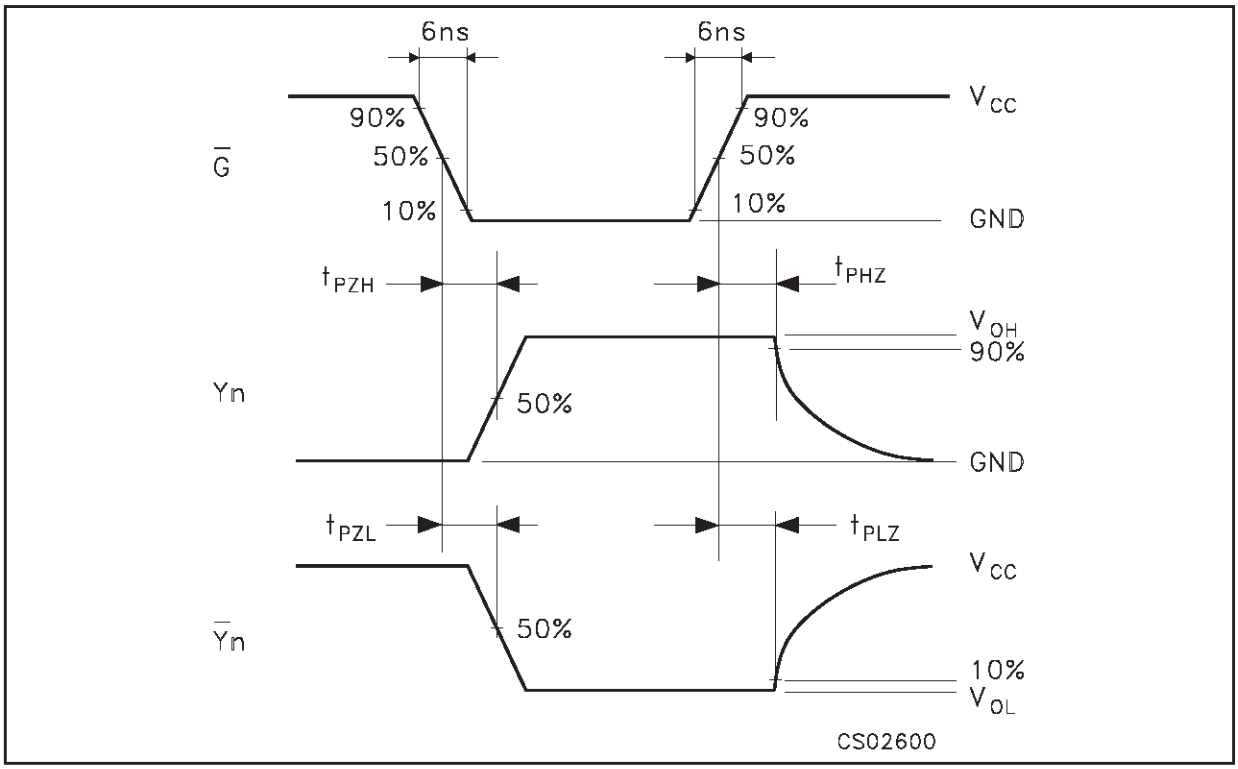

WAVEFORM 2: PROPAGATION DELAY TIMES (f=1MHz; 50% duty cycle)

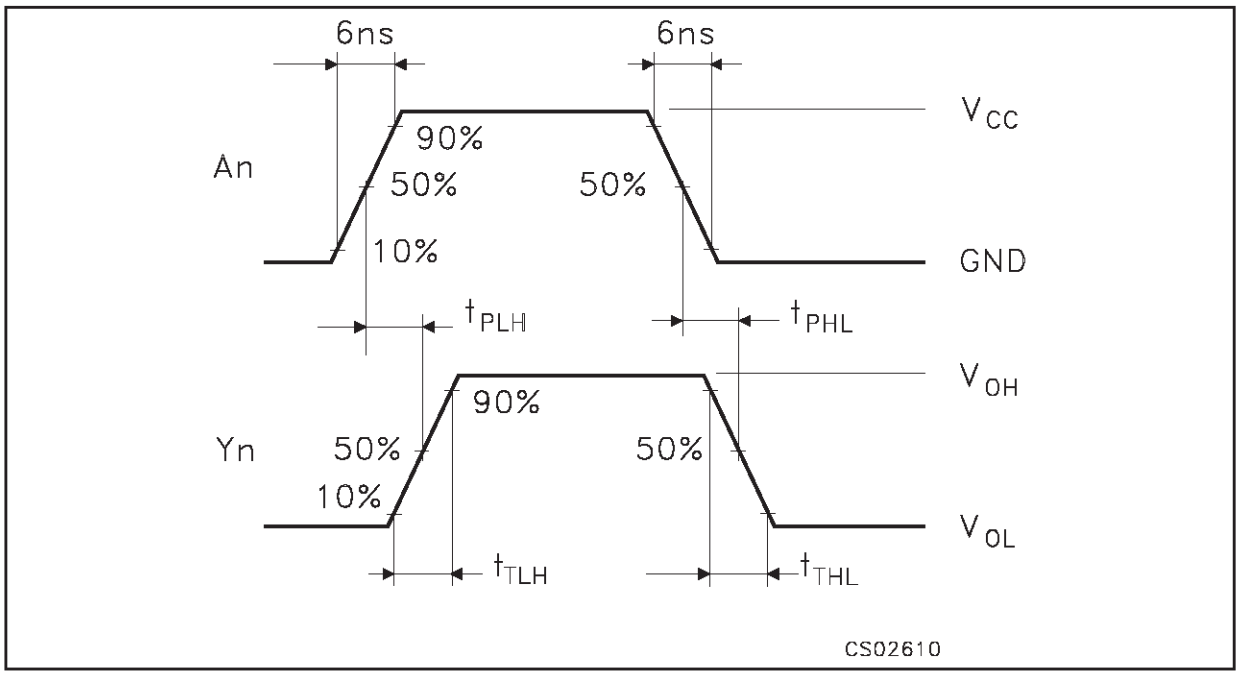

Plastic DIP-16 (0.25) MECHANICAL DATA

DIM.	mm			inch		
	MIN.	TYP.	MAX.	MIN.	TYP.	MAX.
a1	0.51			0.020		
B	0.77		1.65	0.030		0.065
b		0.5			0.020	
b1		0.25			0.010	
D			20			0.787
E		8.5			0.335	
e		2.54			0.100	
e3		17.78			0.700	
F			7.1			0.280
I			5.1			0.201
L		3.3			0.130	
Z			1.27			0.050

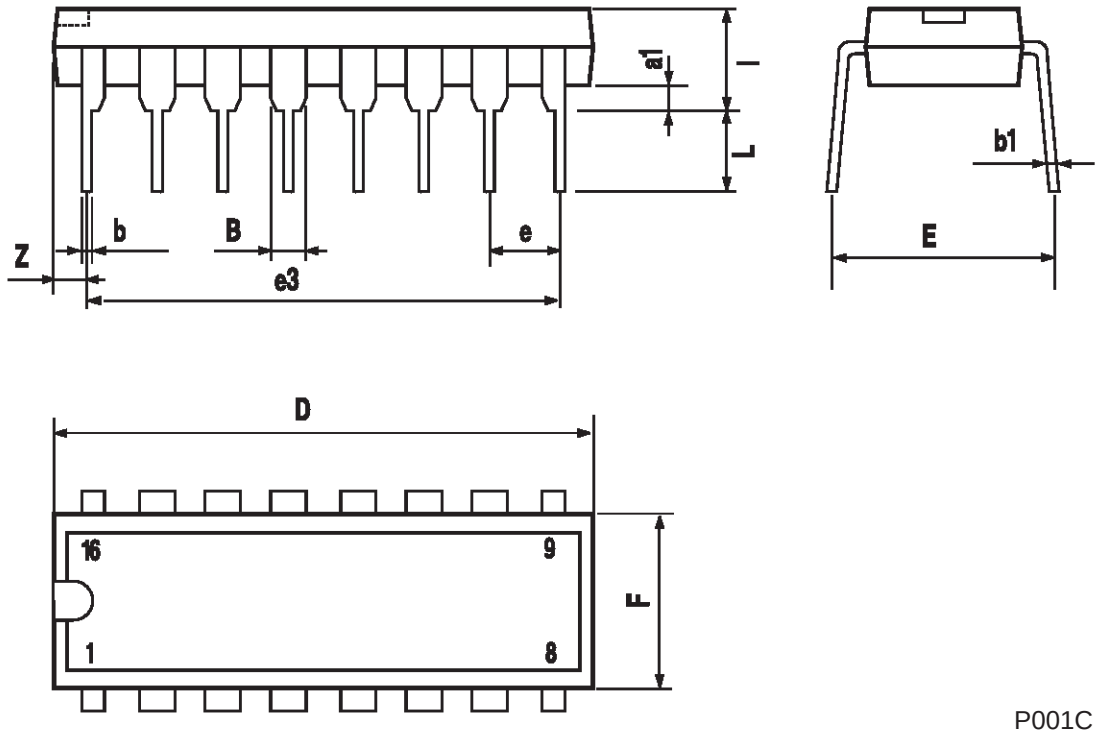

P001C

SO-16 MECHANICAL DATA

DIM.	mm			inch		
	MIN.	TYP.	MAX.	MIN.	TYP.	MAX.
A			1.75			0.068
a1	0.1		0.2	0.004		0.007
a2			1.65			0.064
b	0.35		0.46	0.013		0.018
b1	0.19		0.25	0.007		0.010
C		0.5			0.019	
c1	45 (typ.)					
D	9.8		10	0.385		0.393
E	5.8		6.2	0.228		0.244
e		1.27			0.050	
e3		8.89			0.350	
F	3.8		4.0	0.149		0.157
G	4.6		5.3	0.181		0.208
L	0.5		1.27	0.019		0.050
M			0.62			0.024
S	8 (max.)					

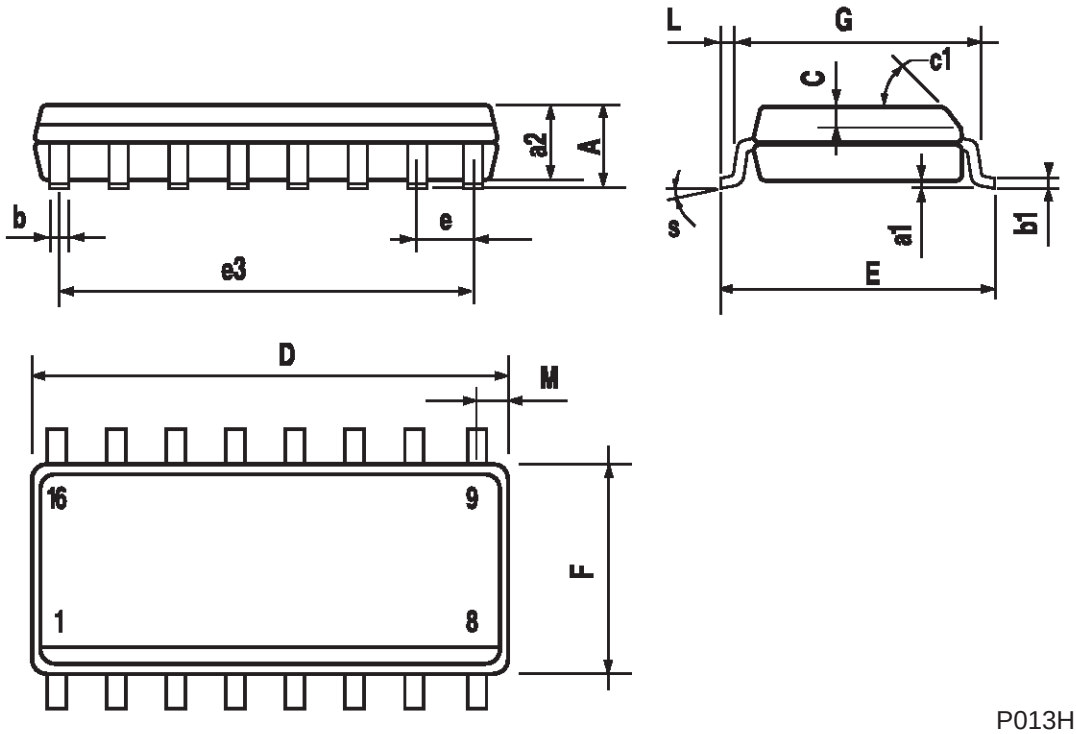

P013H

TSSOP16 MECHANICAL DATA

DIM.	mm			inch		
	MIN.	TYP.	MAX.	MIN.	TYP.	MAX.
A			1.1			0.433
A1	0.05	0.10	0.15	0.002	0.004	0.006
A2	0.85	0.9	0.95	0.335	0.354	0.374
b	0.19		0.30	0.0075		0.0118
c	0.09		0.20	0.0035		0.0079
D	4.9	5	5.1	0.193	0.197	0.201
E	6.25	6.4	6.5	0.246	0.252	0.256
E1	4.3	4.4	4.48	0.169	0.173	0.176
e		0.65 BSC			0.0256 BSC	
K	0°	4°	8°	0°	4°	8°
L	0.50	0.60	0.70	0.020	0.024	0.028