SGS-THOMSON MICROELECTRONICS

2N6050/51/52
2N6057/58/59

COMPLEMENTARY SILICON POWER DARLINGTON TRANSISTORS

- 2N6050, 2N6052, 2N6057 AND 2N6059 ARE SGS-THOMSON PREFERRED SALESTYPES
- HIGH GAIN
- HIGH CURRENT
- HIGH DISSIPATION

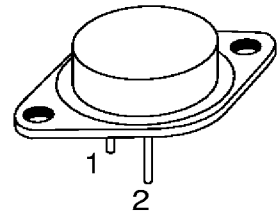

TO-3

DESCRIPTION

The 2N6050, 2N6051 and 2N6052 are silicon epitaxial-base PNP transistors in monolithic Darlington configuration mounted in Jedec TO-3 metal case.

They are inteded for use in power linear and low frequency switching applications.

The complementary NPN types are 2N6057, 2N6058 and 2N6059 respectively.

INTERNAL SCHEMATIC DIAGRAM

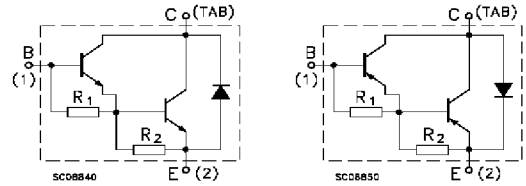

R_1 Typ. = 10 KΩ R_2 Typ. = 150 Ω

ABSOLUTE MAXIMUM RATINGS

Symbol	Parameter		Value			Unit
		NPN	2N6057	2N6058	2N6059	
		PNP	2N6050	2N6051	2N6052	
V_{CBO}	Collector-Base Voltage (I_E = 0)		60	80	100	V
V_{CEX}	Collector-Emitter Voltage (V_{BE} = -1.5V)		60	80	100	V
V_{CEO}	Collector-Emitter Voltage (I_B = 0)		60	80	100	V
V_{EBO}	Emitter-Base Voltage (I_C = 0)		5			V
I_C	Collector Current		12			A
I_{CM}	Collector Peak Current		20			A
I_B	Base Current		0.2			A
P_{tot}	Total Dissipation at $T_c \leq 25$ °C		150			W
T_{stg}	Storage Temperature		-65 to 200			°C
T_j	Max. Operating Junction Temperature		200			°C

For PNP types voltage and current values are negative.

THERMAL DATA

$R_{thj-case}$	Thermal Resistance Junction-case	Max	1.17	°C/W

ELECTRICAL CHARACTERISTICS (T_{case} = 25 °C unless otherwise specified)

Symbol	Parameter	Test Conditions	Min.	Typ.	Max.	Unit
I_{CEX}	Collector Cut-off Current (V_{BE} = -1.5V)	V_{CE} = rated V_{CEX} V_{CE} = rated V_{CEX} T_c = 150 °C			0.5 5	mA mA
I_{CEO}	Collector Cut-off Current (I_B = 0)	for **2N6050/2N6057** V_{CE} = 30 V for **2N6051/2N6058** V_{CE} = 40 V for **2N6052/2N6059** V_{CE} = 50 V			1 1 1	mA mA mA
I_{EBO}	Emitter Cut-off Current (I_C = 0)	V_{EB} = 5 V			2	mA
$V_{CEO(sus)}$*	Collector-Emitter Sustaining Voltage	I_C = 100 mA for **2N6050/2N6057** for **2N6051/2N6058** **for 2N6052/2N6059**	 60 80 100			 V V V
$V_{CE(sat)}$*	Collector-Emitter Saturation Voltage	I_C = 6 A I_B = 24 mA I_C = 12 A I_B = 120 mA			2 3	V V
$V_{BE(sat)}$*	Base-Emitter Saturation Voltage	I_C = 12 A I_B = 120 mA			4	V
V_{BE}*	Base-Emitter Voltage	I_C = 6 A V_{CE} = 3 V			2.8	V
h_{FE}*	DC Current Gain	I_C = 6 A V_{CE} = 3 V I_C = 12 A V_{CE} = 3 V	750 100			
f_T	Transition frequency	I_C = 5 A V_{CE} = 3 V f =1 MHz	4			MHz

* Pulsed: Pulse duration = 300 µs, duty cycle 1.5 %

TO-3 (H) MECHANICAL DATA

DIM.	mm			inch		
	MIN.	TYP.	MAX.	MIN.	TYP.	MAX.
A		11.7			0.460	
B	0.96		1.10	0.037		0.043
C			1.70			0.066
D			8.7			0.342
E			20.0			0.787
G		10.9			0.429	
N		16.9			0.665	
P			26.2			1.031
R	3.88		4.09	0.152		0.161
U			39.50			1.555
V		30.10			1.185	

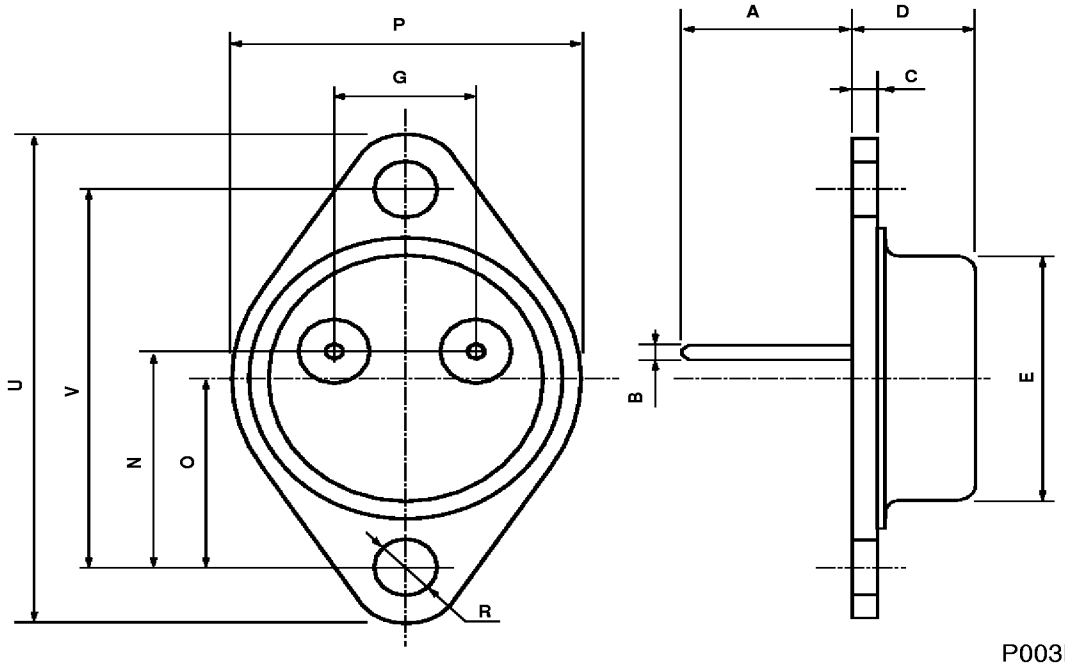

P003N