Integrated Circuit Systems, Inc.

ICS843004I

FEMTOCLOCKS™ CRYSTAL-TO-3.3V, 2.5V LVPECL FREQUENCY SYNTHESIZER

GENERAL DESCRIPTION

The ICS843004I is a 4 output LVPECL synthesizer optimized to generate Fibre Channel reference clock frequencies and is a member of the HiPerClocks™ family of high performance clock solutions from ICS. Using a 26.5625MHz 18pF parallel resonant crystal, the following frequencies can be generated based on the 2 frequency select pins (F_SEL[1:0]): 212.5MHz, 187.5MHz, 159.375MHz, 156.25MHz, 106.25MHz, and 53.125MHz. The ICS843004I uses ICS' 3rd generation low phase noise VCO technology and can achieve 1ps or lower typical rms phase jitter, easily meeting Fibre Channel jitter requirements. The ICS843004I is packaged in a small 24-pin TSSOP package.

FEATURES

- Four 3.3V LVPECL outputs
- Selectable crystal oscillator interface or LVCMOS/LVTTL single-ended input
- Supports the following output frequencies: 212.5MHz, 187.5MHz, 159.375MHz, 156.25MHz, 106.25MHz, 53.125MHz
- VCO range: 560MHz - 680MHz
- Output skew: 50ps (maximum)
- RMS phase jitter @ 212.5MHz, using a 26.5625MHz crystal (2.55MHz - 20MHz): 0.47ps (typical)
- Full 3.3V or 2.5V supply modes
- -40°C to 85°C ambient operating temperature
- Lead-Free fully RoHS compliant

FREQUENCY SELECT FUNCTION TABLE

Inputs						Output Frequency (MHz)
Input Frequency (MHz)	F_SEL1	F_SEL0	M Divider Value	N Divider Value	M/N Divider Value	
26.5625	0	0	24	3	8	212.5
26.5625	0	1	24	4	6	159.375
26.5625	1	0	24	6	4	106.25
26.5625	1	1	24	12	2	53.125
26.04166	0	1	24	4	6	156.25
23.4375	0	0	24	3	8	187.5

PIN ASSIGNMENT

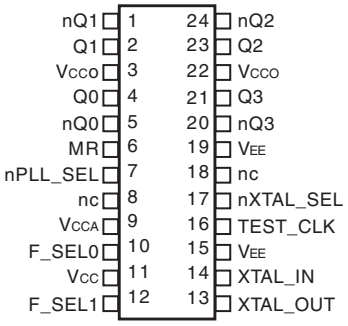

ICS843004I
24-Lead TSSOP
4.40mm x 7.8mm x 0.92mm package body
G Package
Top View

BLOCK DIAGRAM

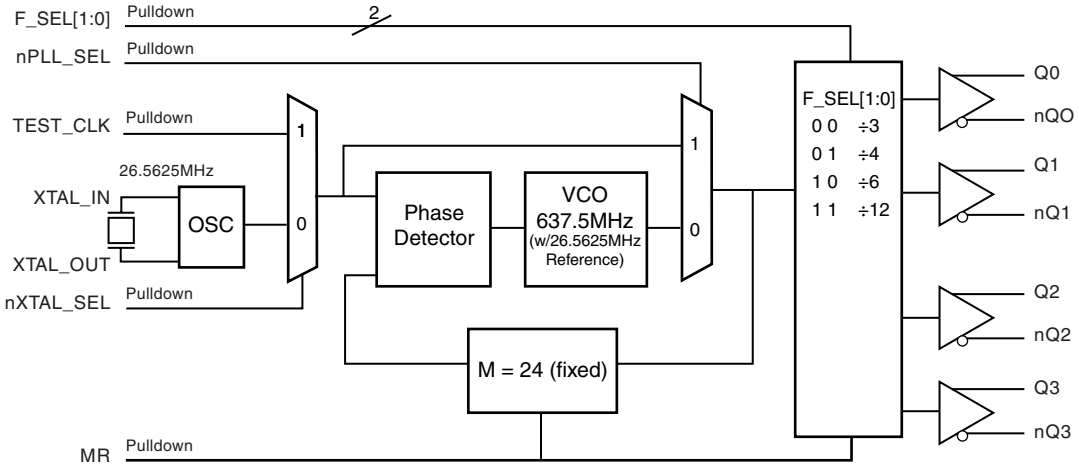

TABLE 1. PIN DESCRIPTIONS

Number	Name	Type		Description
1, 2	nQ1, Q1	Output		Differential output pair. LVPECL interface levels.
3, 22	V_{CCO}	Power		Output supply pins.
4, 5	Q0, nQ0	Ouput		Differential output pair. LVPECL interface levels.
6	MR	Input	Pulldown	Active HIGH Master Reset. When logic HIGH, the internal dividers are reset causing the true outputs Qx to go low and the inverted outputs nQx to go high. When logic LOW, the internal dividers and the outputs are enabled. LVCMOS/LVTTL interface levels.
7	nPLL_SEL	Input	Pulldown	Selects between the PLL and TEST_CLK as input to the dividers. When LOW, selects PLL (PLL Enable). When HIGH, deselects the reference clock (PLL Bypass). LVCMOS/LVTTL interface levels.
8, 18	nc	Unused		No connect.
9	V_{CCA}	Power		Analog supply pin.
10, 12	F_SEL0, F_SEL1	Input	Pulldown	Frequency select pins. LVCMOS/LVTTL interface levels.
11	V_{CC}	Power		Core supply pin.
13, 14	XTAL_OUT, XTAL_IN	Input		Parallel resonant crystal interface. XTAL_OUT is the output, XTAL_IN is the input.
15, 19	V_{EE}	Power		Negative supply pins.
16	TEST_CLK	Input	Pulldown	LVCMOS/LVTTL clock input.
17	nXTAL_SEL	Input	Pulldown	Selects between crystal or TEST_CLK inputs as the the PLL Reference source. Selects XTAL inputs when LOW. Selects TEST_CLK when HIGH. LVCMOS/LVTTL interface levels.
20, 21	nQ3, Q3	Output		Differential output pair. LVPECL interface levels.
23, 24	Q2, nQ2	Output		Differential output pair. LVPECL interface levels.

NOTE: *Pulldown* refers to internal input resistors. See Table 2, Pin Characteristics, for typical values.

TABLE 2. PIN CHARACTERISTICS

Symbol	Parameter	Test Conditions	Minimum	Typical	Maximum	Units
C_{IN}	Input Capacitance			4		pF
$R_{PULLDOWN}$	Input Pulldown Resistor			51		kΩ

ABSOLUTE MAXIMUM RATINGS

Supply Voltage, V_{CC}	4.6V
Inputs, V_I	-0.5V to V_{CC} + 0.5V
Outputs, I_O	
Continuous Current	50mA
Surge Current	100mA
Package Thermal Impedance, θ_{JA}	70°C/W (0 lfpm)
Storage Temperature, T_{STG}	-65°C to 150°C

NOTE: Stresses beyond those listed under Absolute Maximum Ratings may cause permanent damage to the device. These ratings are stress specifications only. Functional operation of product at these conditions or any conditions beyond those listed in the *DC Characteristics* or *AC Characteristics* is not implied. Exposure to absolute maximum rating conditions for extended periods may affect product reliability.

TABLE 3A. POWER SUPPLY DC CHARACTERISTICS, $V_{CC} = V_{CCA} = V_{CCO}$ = 3.3V±5%, TA = -40°C TO 85°C

Symbol	Parameter	Test Conditions	Minimum	Typical	Maximum	Units
V_{CC}	Core Supply Voltage		3.135	3.3	3.465	V
V_{CCA}	Analog Supply Voltage		3.135	3.3	3.465	V
V_{CCO}	Output Supply Voltage		3.135	3.3	3.465	V
I_{EE}	Power Supply Current				130	mA
I_{CCA}	Analog Supply Current	Included in I_{EE}			15	mA

TABLE 3B. POWER SUPPLY DC CHARACTERISTICS, $V_{CC} = V_{CCA} = V_{CCO}$ = 2.5V±5%, TA = -40°C TO 85°C

Symbol	Parameter	Test Conditions	Minimum	Typical	Maximum	Units
V_{CC}	Core Supply Voltage		2.375	2.5	2.625	V
V_{CCA}	Analog Supply Voltage		2.375	2.5	2.625	V
V_{CCO}	Output Supply Voltage		2.375	2.5	2.625	V
I_{EE}	Power Supply Current				120	mA
I_{CCA}	Analog Supply Current	Included in I_{EE}			12	mA

TABLE 3C. LVCMOS / LVTTL DC CHARACTERISTICS, $V_{CC} = V_{CCA} = V_{CCO}$ = 3.3V±5% OR 2.5V±5%, TA = -40°C TO 85°C

Symbol	Parameter	Test Conditions	Minimum	Typical	Maximum	Units
V_{IH}	Input High Voltage	V_{CC} = 3.3V ± 5%	2.0		V_{CC} + 0.3	V
		V_{CC} = 2.5V ± 5%	1.7		V_{CC} + 0.3	V
V_{IL}	Input Low Voltage	V_{CC} = 3.3V ± 5%	-0.3		0.8	V
		V_{CC} = 2.5V ± 5%	-0.3		0.7	V
I_{IH}	Input High Current	$V_{CC} = V_{IN}$ = 3.465V or 2.625V			150	µA
I_{IL}	Input Low Current	V_{CC} = 3.465V or 2.625V, V_{IN} = 0V	-5			µA

TABLE 3D. LVPECL DC CHARACTERISTICS, $V_{CC} = V_{CCA} = V_{CCO}$ = 3.3V±5% OR 2.5V±5%, TA = -40°C TO 85°C

Symbol	Parameter	Test Conditions	Minimum	Typical	Maximum	Units
V_{OH}	Output High Voltage; NOTE 1		V_{CCO} - 1.4		V_{CCO} - 0.9	V
V_{OL}	Output Low Voltage; NOTE 1		V_{CCO} - 2.0		V_{CCO} - 1.7	V
V_{SWING}	Peak-to-Peak Output Voltage Swing		0.6		1.0	V

NOTE 1: Outputs terminated with 50Ω to V_{CCO} - 2V.

TABLE 4. CRYSTAL CHARACTERISTICS

Parameter	Test Conditions	Minimum	Typical	Maximum	Units
Mode of Oscillation		Fundamental			
Frequency		23.33	26.5625	28.33	MHz
Equivalent Series Resistance (ESR)				50	Ω
Shunt Capacitance				7	pF

NOTE: Characterized using an 18pF parallel resonant crystal.

TABLE 5A. AC CHARACTERISTICS, $V_{CC} = V_{CCA} = V_{CCO}$ = 3.3V±5%, TA = -40°C TO 85°C

Symbol	Parameter	Test Conditions	Minimum	Typical	Maximum	Units
f_{OUT}	Output Frequency	F_SEL[1:0] = 00	186.67		226.66	MHz
		F_SEL[1:0] = 01	140		170	MHz
		F_SEL[1:0] = 10	93.33		113.33	MHz
		F_SEL[1:0] = 11	46.67		56.66	MHz
*t*sk(o)	Output Skew; NOTE 1, 3				50	ps
*t*jit(Ø)	RMS Phase Jitter (Random); NOTE 2	212.5MHz, (2.55MHz - 20MHz)		0.47		ps
		159.375MHz, 1.875MHz -20MHz)		0.52		ps
		156.25MHz, (1.875MHz - 20MHz)		0.52		ps
		106.25MHz, (637KHz - 5MHz)		0.62		ps
		53.125MHz, (637KHz - 5MHz)		0.67		ps
t_R / t_F	Output Rise/Fall Time	20% to 80%	300		600	ps
odc	Output Duty Cycle	F_SEL[1:0] ≠ 00	49		51	%
		F_SEL[1:0] = 00	42		58	%

NOTE 1: Defined as skew between outputs at the same supply voltages and with equal load conditions. Measured at $V_{CCO}/2$.
NOTE 2: Please refer to the Phase Noise Plot.
NOTE 3: This parameter is defined in accordance with JEDEC Standard 65.

TABLE 5B. AC CHARACTERISTICS, $V_{CC} = V_{CCA} = V_{CCO}$ = 2.5V±5%, TA = -40°C TO 85°C

Symbol	Parameter	Test Conditions	Minimum	Typical	Maximum	Units
f_{OUT}	Output Frequency	F_SEL[1:0] = 00	186.67		226.66	MHz
		F_SEL[1:0] = 01	140		170	MHz
		F_SEL[1:0] = 10	93.33		113.33	MHz
		F_SEL[1:0] = 11	46.67		56.66	MHz
*t*sk(o)	Output Skew; NOTE 1, 3				50	ps
*t*jit(Ø)	RMS Phase Jitter (Random); NOTE 2	212.5MHz, (2.55MHz - 20MHz)		0.49		ps
		159.375MHz, 1.875MHz -20MHz)		0.52		ps
		156.25MHz, (1.875MHz - 20MHz)		0.52		ps
		106.25MHz, (637KHz - 5MHz)		0.65		ps
		53.125MHz, (637KHz - 5MHz)		0.71		ps
t_R / t_F	Output Rise/Fall Time	20% to 80%	300		600	ps
odc	Output Duty Cycle	F_SEL[1:0] ≠ 00	48		52	%
		F_SEL[1:0] = 00	42		58	%

NOTE 1: Defined as skew between outputs at the same supply voltages and with equal load conditions. Measured at $V_{CCO}/2$.
NOTE 2: Please refer to the Phase Noise Plot.
NOTE 3: This parameter is defined in accordance with JEDEC Standard 65.

TYPICAL PHASE NOISE AT 53.125MHZ AT 3.3V

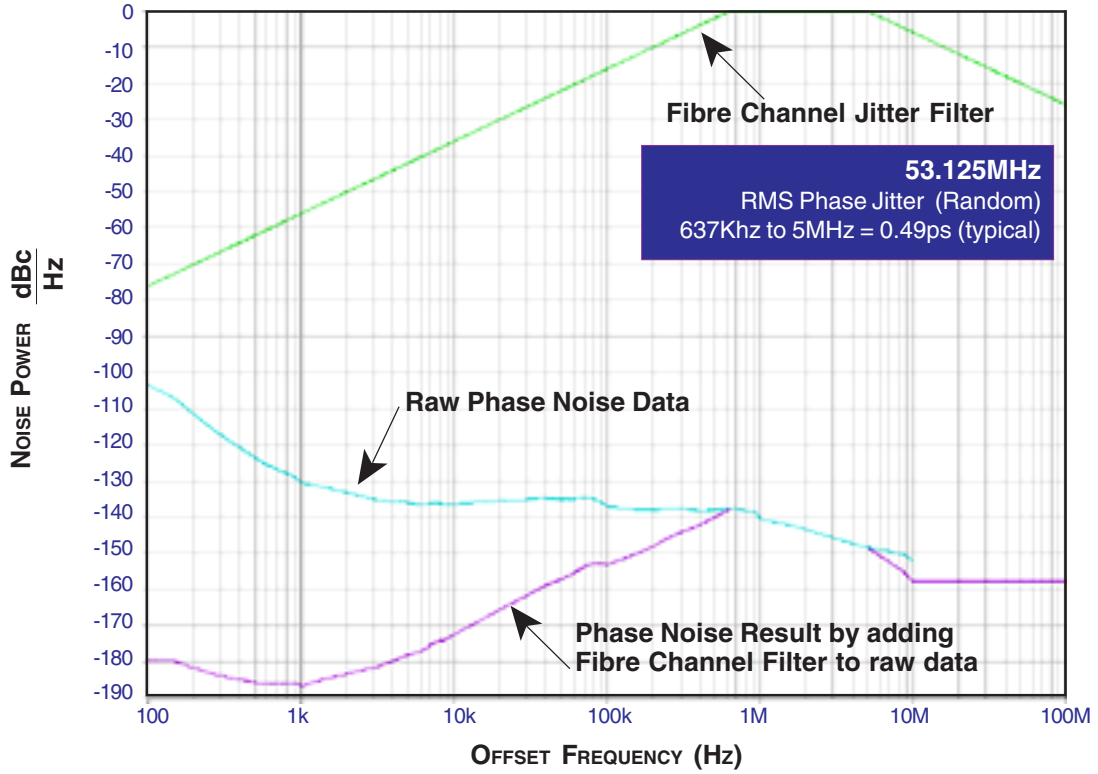

TYPICAL PHASE NOISE AT 212.5MHZ AT 3.3V

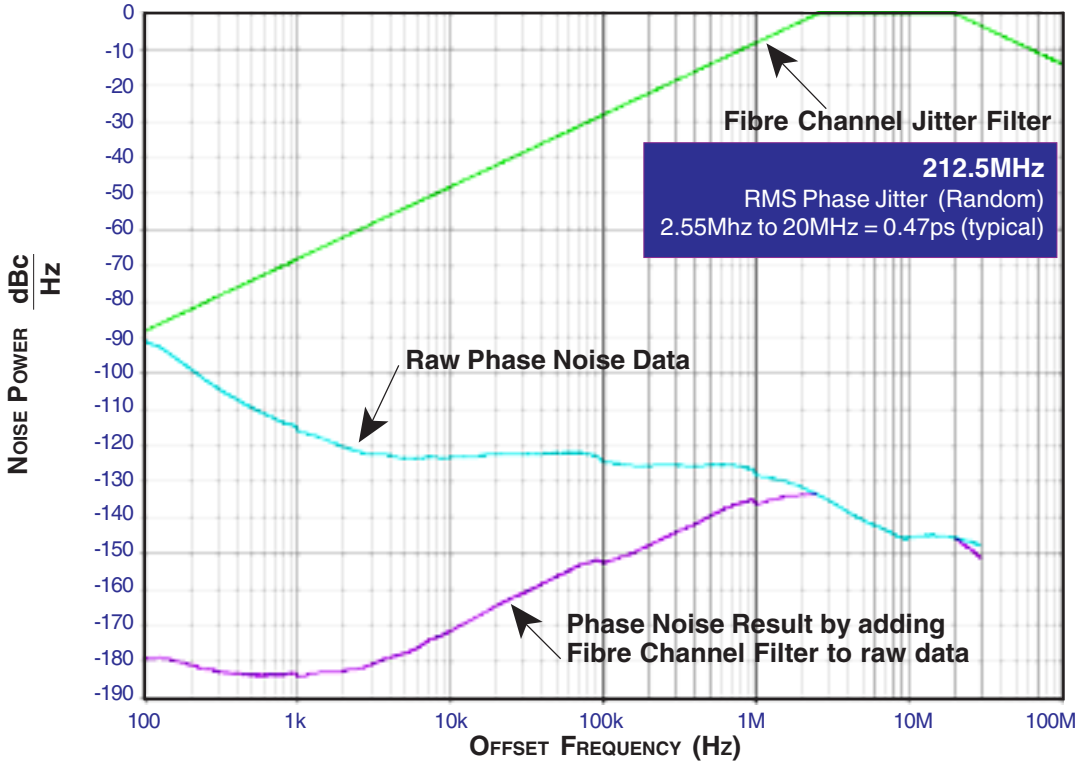

PARAMETER MEASUREMENT INFORMATION

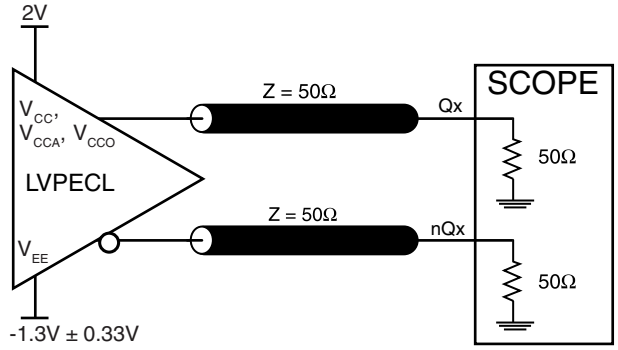

3.3V CORE/3.3V OUTPUT LOAD AC TEST CIRCUIT

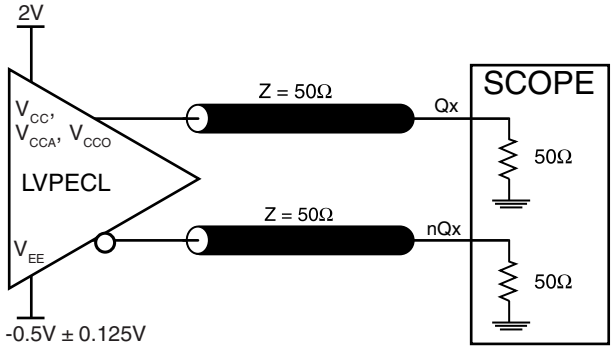

2.5V CORE/2.5V OUTPUT LOAD AC TEST CIRCUIT

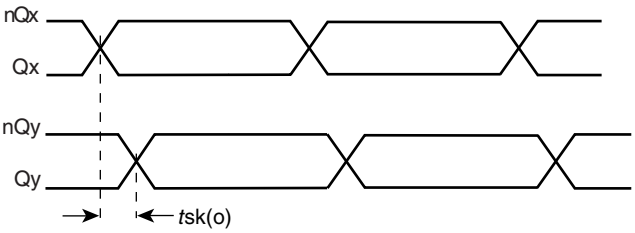

OUTPUT SKEW

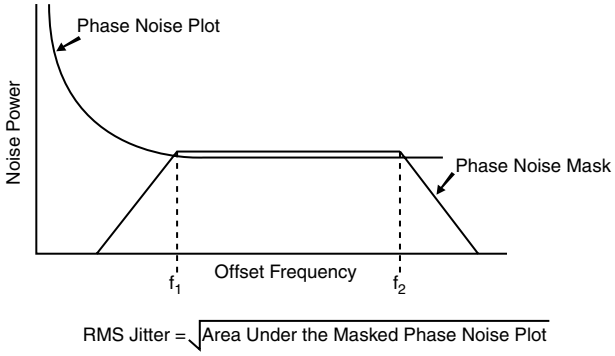

RMS PHASE JITTER

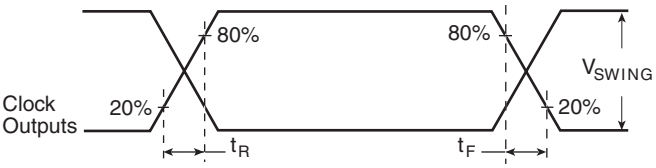

OUTPUT RISE/FALL TIME

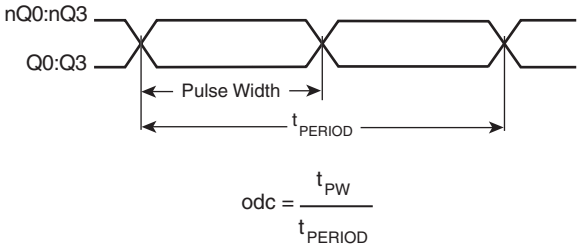

OUTPUT DUTY CYCLE/PULSE WIDTH/PERIOD

APPLICATION INFORMATION

POWER SUPPLY FILTERING TECHNIQUES

As in any high speed analog circuitry, the power supply pins are vulnerable to random noise. The ICS843004I provides separate power supplies to isolate any high switching noise from the outputs to the internal PLL. V_{CC}, V_{CCA}, and V_{CCO} should be individually connected to the power supply plane through vias, and bypass capacitors should be used for each pin. To achieve optimum jitter performance, power supply isolation is required. *Figure 1* illustrates how a 10Ω resistor along with a 10µF and a .01µF bypass capacitor should be connected to each V_{CCA}.

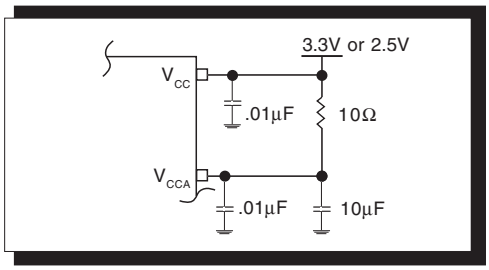

FIGURE 1. POWER SUPPLY FILTERING

TERMINATION FOR 3.3V LVPECL OUTPUT

The clock layout topology shown below is a typical termination for LVPECL outputs. The two different layouts mentioned are recommended only as guidelines.

FOUT and nFOUT are low impedance follower outputs that generate ECL/LVPECL compatible outputs. Therefore, terminating resistors (DC current path to ground) or current sources must be used for functionality. These outputs are designed to drive 50Ω transmission lines. Matched impedance techniques should be used to maximize operating frequency and minimize signal distortion. *Figures 2A and 2B* show two different layouts which are recommended only as guidelines. Other suitable clock layouts may exist and it would be recommended that the board designers simulate to guarantee compatibility across all printed circuit and clock component process variations.

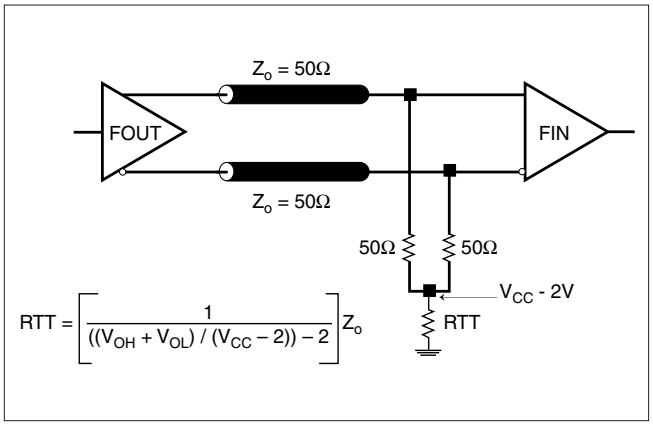

FIGURE 2A. LVPECL OUTPUT TERMINATION

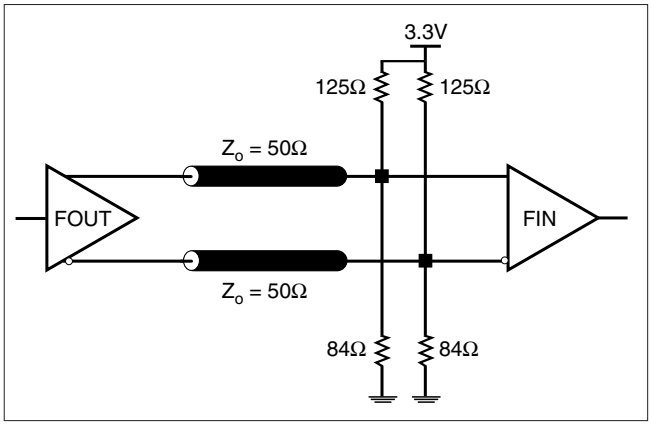

FIGURE 2B. LVPECL OUTPUT TERMINATION

TERMINATION FOR 2.5V LVPECL OUTPUT

Figure 3A and *Figure 3B* show examples of termination for 2.5V LVPECL driver. These terminations are equivalent to terminating 50Ω to V_{CC} - 2V. For V_{CCO} = 2.5V, the V_{CCO} - 2V is very close to ground level. The R3 in Figure 3B can be eliminated and the termination is shown in *Figure 3C.*

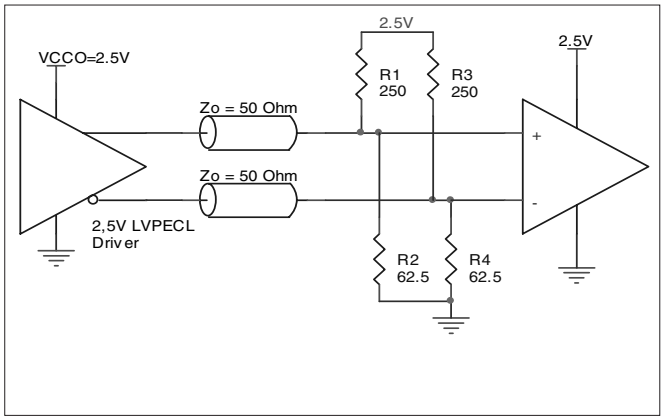

FIGURE 3A. 2.5V LVPECL DRIVER TERMINATION EXAMPLE

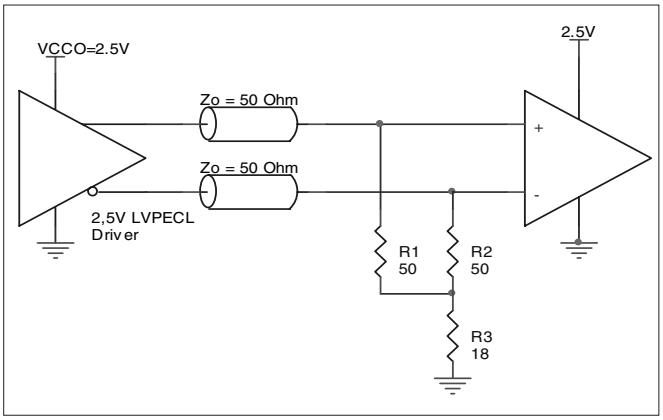

FIGURE 3B. 2.5V LVPECL DRIVER TERMINATION EXAMPLE

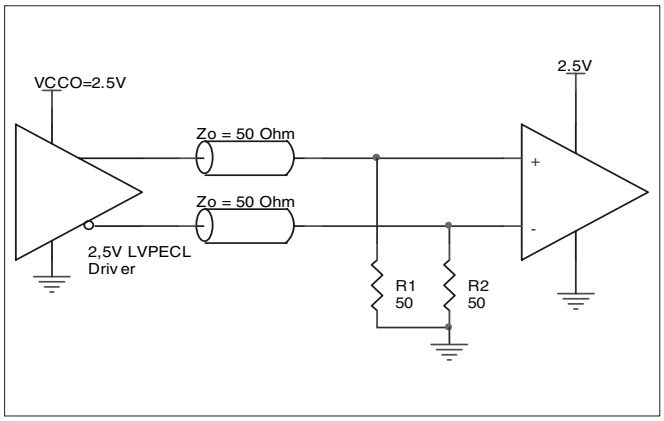

FIGURE 3C. 2.5V LVPECL TERMINATION EXAMPLE

CRYSTAL INPUT INTERFACE

The ICS843004I has been characterized with 18pF parallel resonant crystals. The capacitor values shown in *Figure 4* below were determined using a 26.5625MHz 18pF parallel resonant crystal and were chosen to minimize the ppm error.

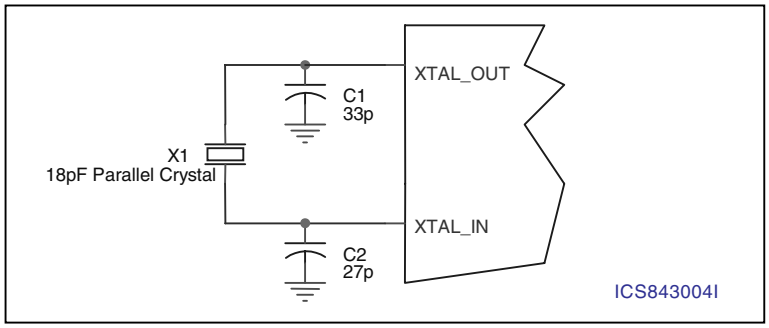

Figure 4. CRYSTAL INPUT INTERFACE

LAYOUT GUIDELINE

Figure 5 shows a schematic example of the ICS843004I. An example of LVEPCL termination is shown in this schematic. Additional LVPECL termination approaches are shown in the LVPECL Termination Application Note. In this example, an 18pF parallel resonant 26.5625MHz crystal is used. The C1=27pF and C2=33pF are recommended for frequency accuracy. For different board layout, the C1 and C2 may be slightly adjusted for optimizing frequency accuracy.

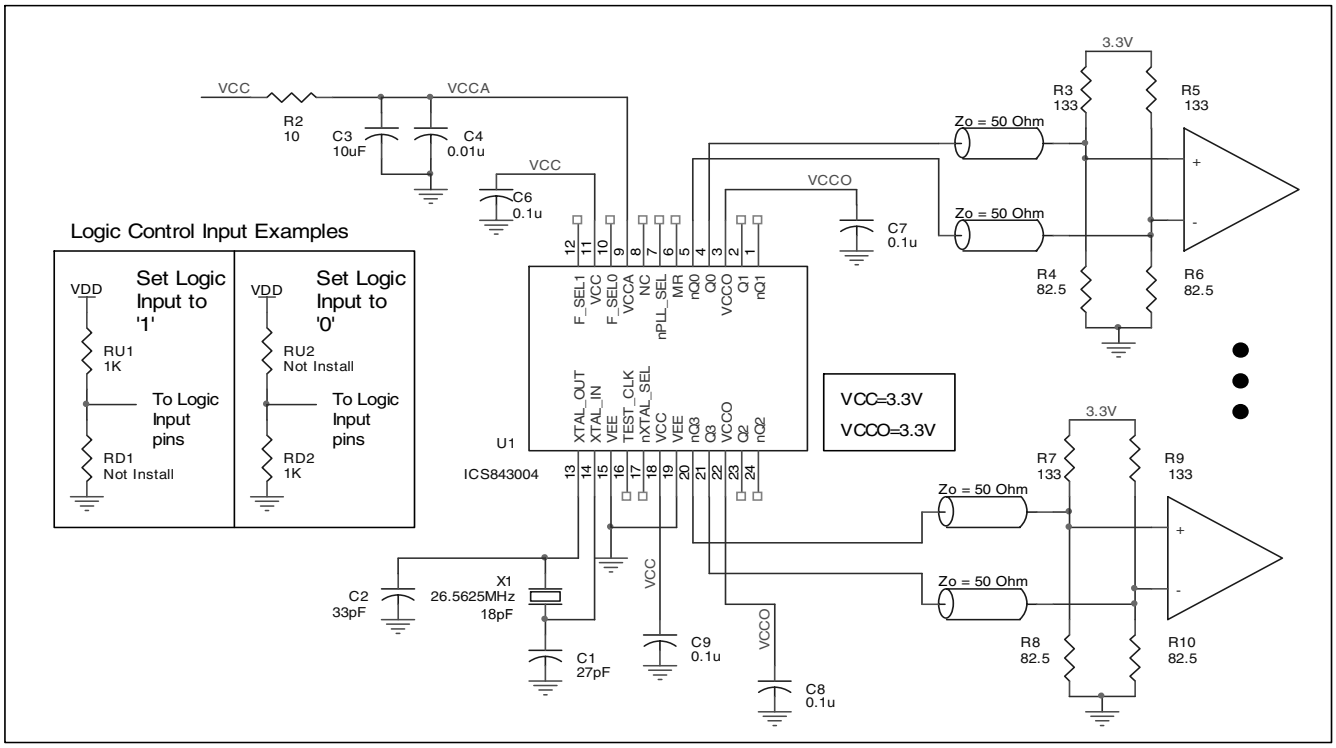

FIGURE 5. ICS843004I SCHEMATIC EXAMPLE

POWER CONSIDERATIONS

This section provides information on power dissipation and junction temperature for the ICS843004I.
Equations and example calculations are also provided.

1. Power Dissipation.
The total power dissipation for the ICS843004I is the sum of the core power plus the power dissipated in the load(s).
The following is the power dissipation for V_{CC} = 3.3V + 5% = 3.465V, which gives worst case results.
NOTE: Please refer to Section 3 for details on calculating power dissipated in the load.

- Power $(core)_{MAX} = V_{CC_MAX} * I_{EE_MAX}$ = 3.465V * 130mA = **450.45mW**
- Power $(outputs)_{MAX}$ = **30mW/Loaded Output pair**
  If all outputs are loaded, the total power is 4 * 30mW = **120mW**

Total Power$_{_MAX}$ (3.465V, with all outputs switching) = 450.45mW + 120mW = **570.45mW**

2. Junction Temperature.
Junction temperature, Tj, is the temperature at the junction of the bond wire and bond pad and directly affects the reliability of the device. The maximum recommended junction temperature for HiPerClockS™ devices is 125°C.

The equation for Tj is as follows: $Tj = \theta_{JA} * Pd_total + T_A$

Tj = Junction Temperature

θ_{JA} = Junction-to-Ambient Thermal Resistance

Pd_total = Total Device Power Dissipation (example calculation is in section 1 above)

T_A = Ambient Temperature

In order to calculate junction temperature, the appropriate junction-to-ambient thermal resistance θ_{JA} must be used. Assuming a moderate air flow of 1 meter per second and a multi-layer board, the appropriate value is 65°C/W per Table 6 below.

Therefore, Tj for an ambient temperature of 85°C with all outputs switching is:
85°C + 0.571W * 65°C/W = 122.1°C. This is below the limit of 125°C.

This calculation is only an example. Tj will obviously vary depending on the number of loaded outputs, supply voltage, air flow, and the type of board (single layer or multi-layer).

TABLE 6. THERMAL RESISTANCE θ_{JA} FOR 24-PIN TSSOP, FORCED CONVECTION

θ_{JA} by Velocity (Meters per Second)			
	0	**1**	**2.5**
Multi-Layer PCB, JEDEC Standard Test Boards	70°C/W	65°C/W	62°C/W

3. Calculations and Equations.
The purpose of this section is to derive the power dissipated into the load.
LVPECL output driver circuit and termination are shown in *Figure 6.*

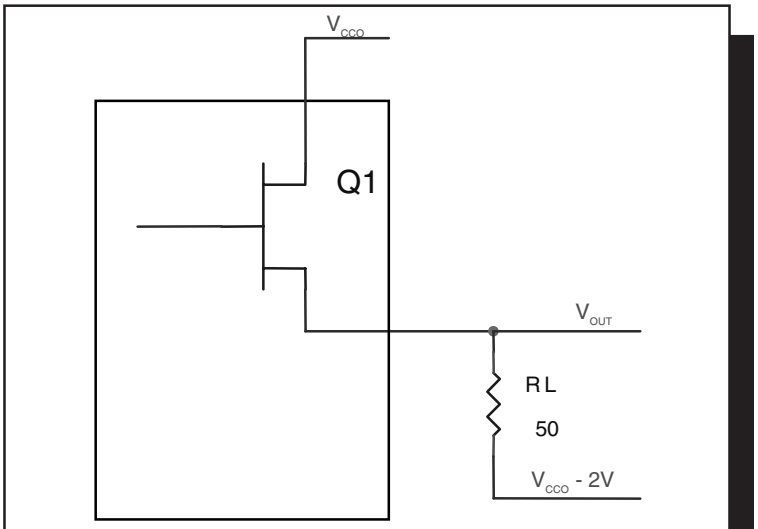

FIGURE 6. LVPECL DRIVER CIRCUIT AND TERMINATION

To calculate worst case power dissipation into the load, use the following equations which assume a 50Ω load, and a termination voltage of V_{CC} - 2V.

- For logic high, $V_{OUT} = V_{OH_MAX} = \mathbf{V_{CC_MAX} - 0.9V}$

  $(V_{CCO_MAX} - V_{OH_MAX}) = \mathbf{0.9V}$

- For logic low, $V_{OUT} = V_{OL_MAX} = \mathbf{V_{CC_MAX} - 1.7V}$

  $(V_{CCO_MAX} - V_{OL_MAX}) = \mathbf{1.7V}$

Pd_H is power dissipation when the output drives high.
Pd_L is the power dissipation when the output drives low.

$Pd_H = [(V_{OH_MAX} – (V_{CC_MAX} - 2V))/R_L] * (V_{CC_MAX} - V_{OH_MAX}) = [(2V - (V_{CC_MAX} - V_{OH_MAX}))/R_L] * (V_{CC_MAX} - V_{OH_MAX}) =$
$[(2V - 0.9V)/50Ω] * 0.9V =$ **19.8mW**

$Pd_L = [(V_{OL_MAX} – (V_{CC_MAX} - 2V))/R_L] * (V_{CC_MAX} - V_{OL_MAX}) = [(2V - (V_{CC_MAX} - V_{OL_MAX}))/R_L] * (V_{CC_MAX} - V_{OL_MAX}) =$
$[(2V - 1.7V)/50Ω] * 1.7V =$ **10.2mW**

Total Power Dissipation per output pair = Pd_H + Pd_L = **30mW**

RELIABILITY INFORMATION

TABLE 7. θ_{JA} VS. AIR FLOW TABLE FOR 24 LEAD TSSOP

θ_{JA} by Velocity (Meters per Second)			
	0	**1**	**2.5**
Multi-Layer PCB, JEDEC Standard Test Boards	70°C/W	65°C/W	62°C/W

TRANSISTOR COUNT

The transistor count for ICS843004I is: 2578

PACKAGE OUTLINE - G SUFFIX FOR 24 LEAD TSSOP

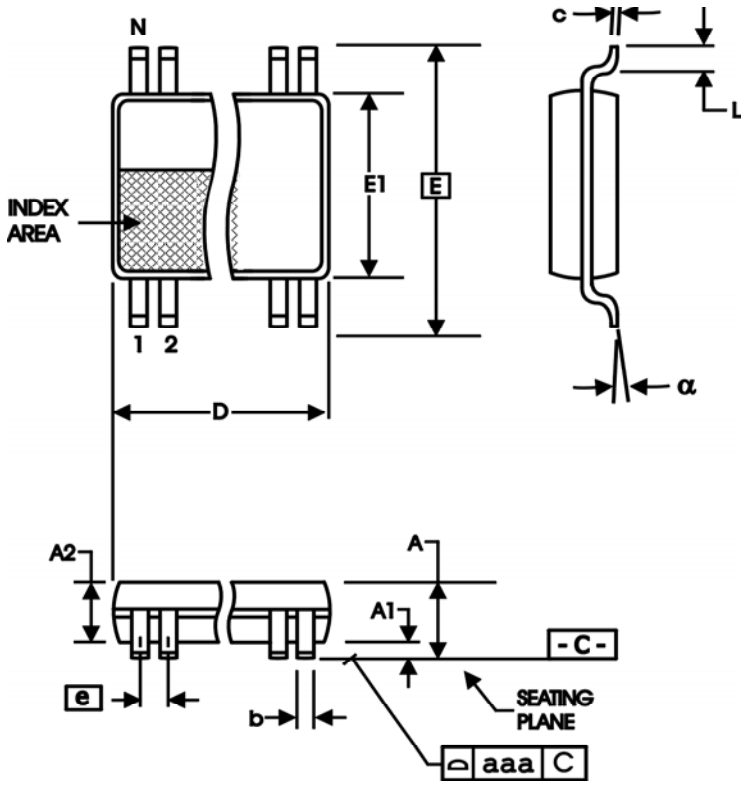

TABLE 8. PACKAGE DIMENSIONS

SYMBOL	Millimeters	
	Minimum	Maximum
N	24	
A	--	1.20
A1	0.05	0.15
A2	0.80	1.05
b	0.19	0.30
c	0.09	0.20
D	7.70	7.90
E	6.40 BASIC	
E1	4.30	4.50
e	0.65 BASIC	
L	0.45	0.75
α	0°	8°
aaa	--	0.10

Reference Document: JEDEC Publication 95, MO-153

TABLE 9. ORDERING INFORMATION

Part/Order Number	Marking	Package	Shipping Packaging	Temperature
ICS843004AGI	ICS843004AGI	24 Lead TSSOP	tube	-40°C to 85°C
ICS843004AGIT	ICS843004AGI	24 Lead TSSOP	2500 tape & reel	-40°C to 85°C
ICS843004AGILF	TBD	24 Lead "Lead Free" TSSOP	tube	-40°C to 85°C
ICS843004AGILFT	TBD	24 Lead "Lead Free" TSSOP	2500 tape & reel	-40°C to 85°C

The aforementioned trademark, HiPerClockS™ and FEMTOCLOCKS™ is a trademark of Integrated Circuit Systems, Inc. or its subsidiaries in the United States and/or other countries.
While the information presented herein has been checked for both accuracy and reliability, Integrated Circuit Systems, Incorporated (ICS) assumes no responsibility for either its use or for infringement of any patents or other rights of third parties, which would result from its use. No other circuits, patents, or licenses are implied. This product is intended for use in normal commercial and industrial applications. Any other applications such as those requiring high reliability or other extraordinary environmental requirements are not recommended without additional processing by ICS. ICS reserves the right to change any circuitry or specifications without notice. ICS does not authorize or warrant any ICS product for use in life support devices or critical medical instruments.