PRELIMINARY

Integrated Circuit Systems, Inc.

ICS8430-51

600MHz, Low Jitter LVCMOS/ LVTTL-to-3.3V LVPECL Frequency Synthesizer

General Description

The ICS8430-51 is a general purpose, dual output Crystal-to-3.3V Differential LVPECL High Frequency Synthesizer and a member of the HiPerClockS™ family of High Performance Clock Solutions from ICS. The ICS8430-51 has a selectable TEST_CLK or crystal inputs. The VCO operates at a frequency range of 200MHz to 700MHz. With FOUT0 configured to divide the VCO frequency by 2, output frequency steps as small as 2MHz can be achieved using a 16MHz crystal or reference clock. FOUT1 provides an additional divide by 16 and 180° phase shift. Output frequencies up to 600MHz can be programmed using the serial or parallel interfaces to the configuration logic. The low jitter and frequency range of the ICS8430-51 make it an ideal clock generator for most clock tree applications.

Features

- Dual differential 3.3V LVPECL outputs
- Selectable crystal oscillator interface or LVCMOS/LVTTL TEST_CLK
- Maximum output frequency: 600MHz
- Crystal input frequency range: 14MHz to 25MHz
- VCO range: 200MHz to 700MHz
- Parallel or serial interface for programming counter and output dividers
- RMS period jitter: 2.6ps (typical)
- Cycle-to-cycle jitter: 17ps (typical)
- 3.3V supply voltage
- 0°C to 70°C ambient operating temperature
- Industrial temperature information available upon request

Block Diagram

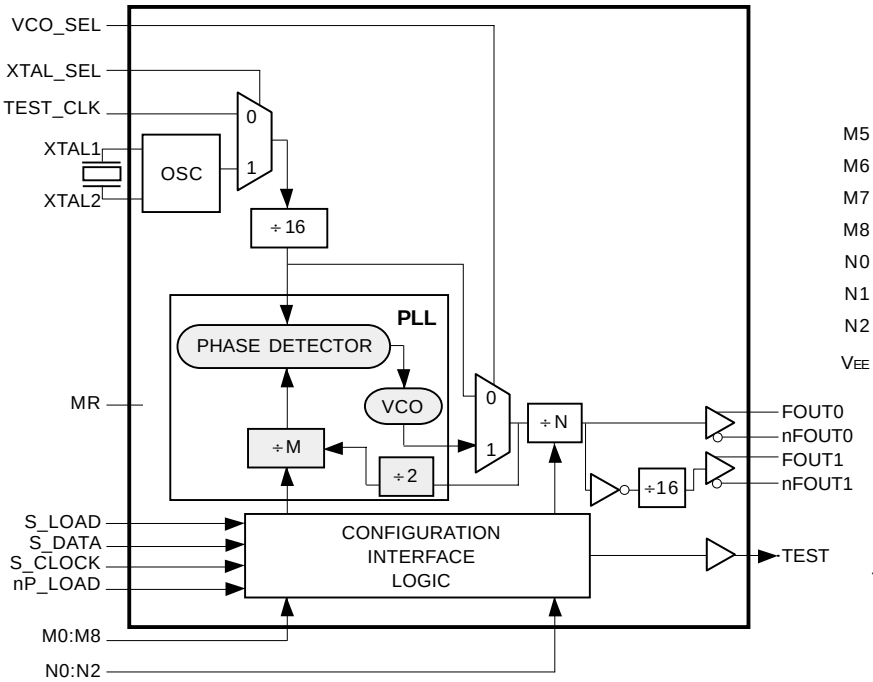

Pin Assignment

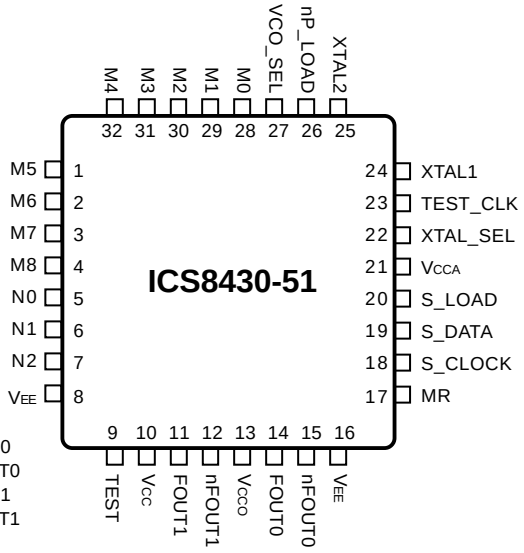

32-Lead LQFP
7mm x 7mm x 1.4mm package body
Y Package
Top View

The Preliminary Information presented herein represents a product in prototyping or pre-production. The noted characteristics are based on initial product characterization. Integrated Circuit Systems, Incorporated (ICS) reserves the right to change any circuitry or specifications without notice.

Functional Description

NOTE: The functional description that follows describes operation using a 16MHz crystal. Valid PLL loop divider values for different crystal or input frequencies are defined in the Input Frequency Characteristics, Table 5, NOTE 1.

The ICS8430-51 features a fully integrated PLL and therefore requires no external components for setting the loop bandwidth. A parallel-resonant, fundamental crystal is used as the input to the on-chip oscillator. The output of the oscillator is divided by 16 prior to the phase detector. With a 16MHz crystal, this provides a 1MHz reference frequency. The VCO of the PLL operates over a range of 200MHz to 700MHz. The output of the M divider is also applied to the phase detector.

The phase detector and the M divider force the VCO output frequency to be 2M times the reference frequency by adjusting the VCO control voltage. Note that for some values of M (either too high or too low), the PLL will not achieve lock. The output of the VCO is scaled by a divider prior to being sent to each of the LVPECL output buffers. The divider provides a 50% output duty cycle.

The programmable features of the ICS8430-51 support two input modes, programmable M divider and N output divider. The two input operational modes are parallel and serial. *Figure 1* shows the timing diagram for each mode. In parallel mode, the nP_LOAD input is initially LOW. The data on inputs M0 through M8 and N0 through N2 is passed directly to the M divider and N output divider. On the LOW-to-HIGH transition of the nP_LOAD input, the data is latched and the M divider remains loaded until the next LOW transition on nP_LOAD or until a serial event occurs. As a result, the M and N bits can be hardwired to set the M divider and N output divider to a specific default state that will automatically occur during power-up. The TEST output is LOW when operating in the parallel input mode. The relationship between the VCO frequency, the crystal frequency and the M divider is defined as follows:

$$fVCO = \frac{fxtal}{16} \times 2M$$

The M value and the required values of M0 through M8 are shown in Table 3B, Programmable VCO Frequency Function Table. Valid M values for which the PLL will achieve lock for a 16MHz reference are defined as $100 \le M \le 350$. The frequency out is defined as follows:

$$fout = \frac{fVCO}{N} = \frac{fxtal}{16} \times \frac{2M}{N}$$

Serial operation occurs when nP_LOAD is HIGH and S_LOAD is LOW. The shift register is loaded by sampling the S_DATA bits with the rising edge of S_CLOCK. The contents of the shift register are loaded into the M divider and N output divider when S_LOAD transitions from LOW-to-HIGH. The M divide and N output divide values are latched on the HIGH-to-LOW transition of S_LOAD. If S_LOAD is held HIGH, data at the S_DATA input is passed directly to the M divider and N output divider on each rising edge of S_CLOCK. The serial mode can be used to program the M and N bits and test bits T1 and T0. The internal registers T0 and T1 determine the state of the TEST output as follows:

T1	T0	TEST Output
0	0	LOW
0	1	S_Data
1	0	Output of M divider
1	1	CMOS Fout

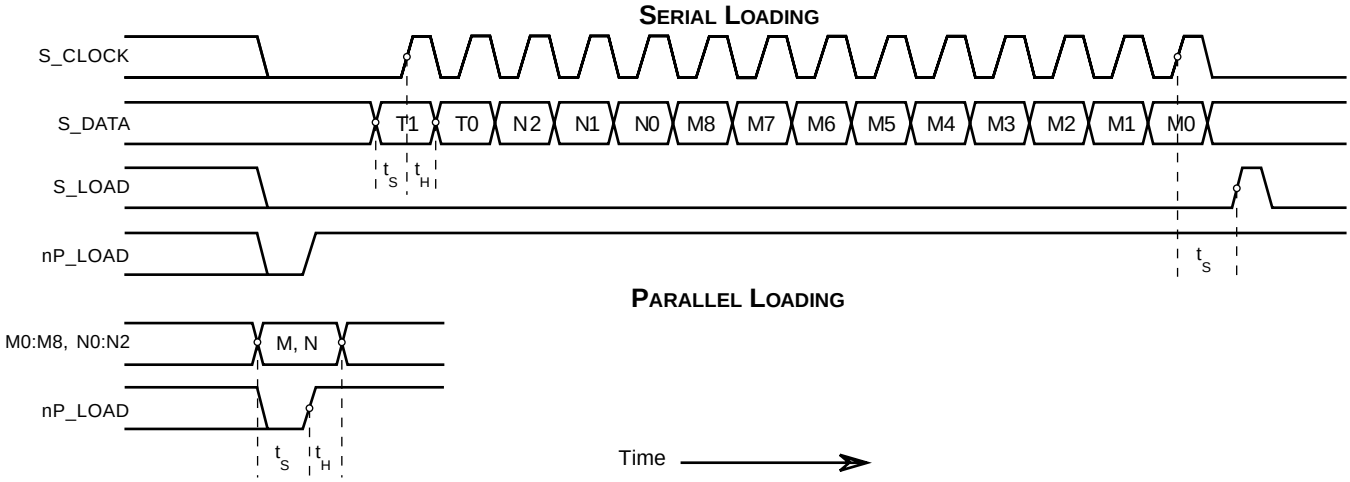

Figure 1. Parallel & Serial Load Operations

*NOTE: The NULL timing slot must be observed.

Table 1. Pin Descriptions

Number	Name	Type		Description
1, 2, 3, 28, 29, 30 31, 32,	M5, M6, M7, M0, M1, M2, M3, M4	Input	Pulldown	M divider inputs. Data latched on LOW-to-HIGH transition of nP_LOAD input. LVCMOS / LVTTL interface levels.
4	M8	Input	Pullup	
5, 6	N0, N1	Input	Pulldown	Determines output divider value as defined in Table 3C Function Table. LVCMOS / LVTTL interface levels.
7	N2	Input	Pullup	
8, 16	V_{EE}	Power		Negative supply pins.
9	TEST	Output		Test output which is ACTIVE in the serial mode of operation. Output driven LOW in parallel mode. LVCMOS/ LVTTL interface levels.
10	V_{CC}	Power		Core power supply pin.
11, 12	FOUT1, nFOUT1	Output		Differential output for the synthesizer with shifted divide by 16. 3.3V LVPECL interface levels.
13	V_{CCO}	Power		Output supply pin.
14, 15	FOUT0, nFOUT0	Output		Differential output for the synthesizer. 3.3V LVPECL interface levels.
17	MR	Input	Pulldown	Active High Master Reset. When logic HIGH, the internal dividers are reset causing the true outputs FOUTx to go low and the inverted outputs nFOUTx to go high. When logic LOW, the internal dividers and the outputs are enabled. Assertion of MR does not affect loaded M, N, and T values. LVCMOS / LVTTL interface levels.
18	S_CLOCK	Input	Pulldown	Clocks in serial data present at S_DATA input into the shift regiser on the rising edge of S_CLOCK. LVCMOS / LVTTL interface levels.
19	S_DATA	Input	Pulldown	Shift register serial input. Data sampled on the rising edge of S_CLOCK. LVCMOS / LVTTL interface levels.
20	S_LOAD	Input	Pulldown	Controls transition of data from shift register into the dividers. LVCMOS / LVTTL interface levels.
21	V_{CCA}	Power		Analog supply pin.
22	XTAL_SEL	Input	Pullup	Selects between the crystal oscillator or test clock as the PLL reference source. Selects XTAL inputs when HIGH. Selects TEST_CLK when LOW. LVCMOS / LVTTL interface levels.
23	TEST_CLK	Input	Pulldown	Test clock input. LVCMOS / LVTTL interface levels.
24, 25	XTAL1, XTAL2	Input		Crystal oscillator interface. XTAL1 is the input. XTAL2 is the output.
26	nP_LOAD	Input	Pulldown	Parallel load input. Determines when data present at M8:M0 is loaded into the M divider, and when data present at N2:N0 sets the N output divider value. LVCMOS / LVTTL interface levels.
27	VCO_SEL	Input	Pullup	Determines whether synthesizer is in PLL or bypass mode. LVCMOS / LVTTL interface levels.

NOTE: *Pullup* and *Pulldown* refer to internal input resistors. See Table 2, Pin Characteristics, for typical values.

Table 2. Pin Characteristics

Symbol	Parameter	Test Conditions	Minimum	Typical	Maximum	Units
C_{IN}	Input Capacitance				4	pF
R_{PULLUP}	Input Pullup Resistor			51		KΩ
$R_{PULLDOWN}$	Input Pulldown Resistor			51		KΩ

Table 3A. Parallel and Serial Mode Function Table

Inputs							Conditions
MR	nP_LOAD	M	N	S_LOAD	S_CLOCK	S_DATA	
H	X	X	X	X	X	X	Reset. Forces outputs LOW.
L	L	Data	Data	X	X	X	Data on M and N inputs passed directly to the M divider and N output divider. TEST output forced LOW.
L	↑	Data	Data	L	X	X	Data is latched into input registers and remains loaded until next LOW transition or until a serial event occurs.
L	H	X	X	L	↑	Data	Serial input mode. Shift register is loaded with data on S_DATA on each rising edge of S_CLOCK.
L	H	X	X	↑	L	Data	Contents of the shift register are passed to the M divider and N output divider.
L	H	X	X	↓	L	Data	M divider and N output divider values are latched.
L	H	X	X	L	X	X	Parallel or serial input do not affect shift registers.
L	H	X	X	H	↑	Data	S_DATA passed directly to M divider as it is clocked.

NOTE: L = LOW
H = HIGH
X = Don't care
↑ = Rising edge transition
↓ = Falling edge transition

Table 3B. Programmable VCO Frequency Function Table (NOTE 1)

VCO Frequency (MHz)	M Divide	256	128	64	32	16	8	4	2	1
		M8	M7	M6	M5	M4	M3	M2	M1	M0
200	100	0	0	1	1	0	0	1	0	0
202	101	0	0	1	1	0	0	1	0	1
204	102	0	0	1	1	0	0	1	1	0
206	103	0	0	1	1	0	0	1	1	1
•	•	•	•	•	•	•	•	•	•	•
•	•	•	•	•	•	•	•	•	•	•
696	348	1	0	1	0	1	1	1	0	0
698	349	1	0	1	0	1	1	1	0	1
700	350	1	0	1	0	1	1	1	1	0

NOTE 1: These M divide values and the resulting frequencies correspond to crystal or TEST_CLK input frequency of 16MHz.

Table 3C. Programmable Output Divider Function Table

Inputs			N Divider Value	FOUT0, nFOUT0 Output Frequency (MHz)	
N2	N1	N0		Minimum	Maximum
0	0	0	2	100	350
0	0	1	4	50	175
0	1	0	8	25	87.5
0	1	1	16	12.5	43.75
1	0	0	1	200	600
1	0	1	2	100	350
1	1	0	4	50	175
1	1	1	8	25	87.5

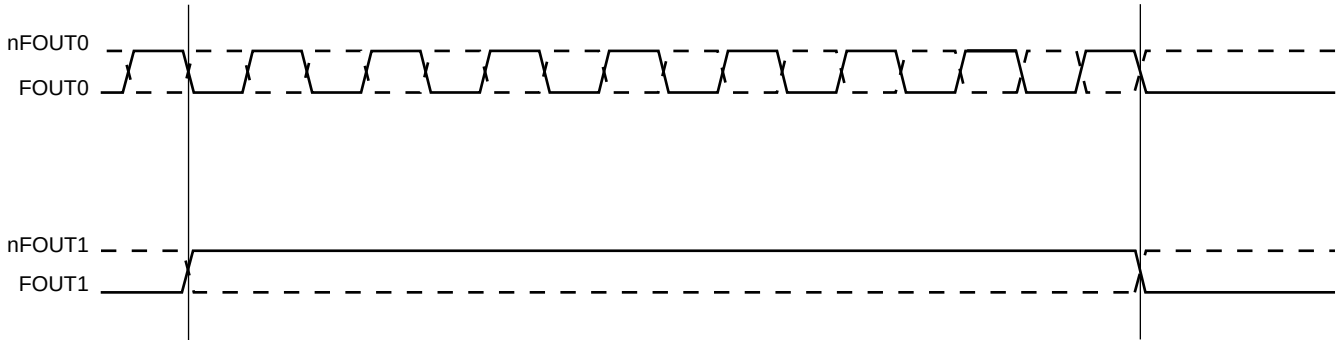

Figure 2. FOUTx Timing Diagram

Absolute Maximum Ratings

Supply Voltage, V_{CC}	4.6V
Inputs, V_I	-0.5V to V_{CC} + 0.5 V
Outputs, V_O	-0.5V to V_{CCO} + 0.5V
Package Thermal Impedance, θ_{JA}	47.9°C/W (0 lfpm)
Storage Temperature, T_{STG}	-65°C to 150°C

NOTE: Stresses beyond those listed under Absolute Maximum Ratings may cause permanent damage to the device. These ratings are stress specifications only. Functional operation of product at these conditions or any conditions beyond those listed in the *DC Characteristics* or *AC Characteristics* is not implied. Exposure to absolute maximum rating conditions for extended periods may affect product reliability.

Table 4A. Power Supply DC Characteristics, $V_{CC} = V_{CCA} = V_{CCO} = 3.3V±5\%$, T_A = 0°C to 70°C

Symbol	Parameter	Test Conditions	Minimum	Typical	Maximum	Units
V_{CC}	Core Supply Voltage		3.135	3.3	3.465	V
V_{CCA}	Analog Supply Voltage		3.135	3.3	3.465	V
V_{CCO}	Output Supply Voltage		3.135	3.3	3.465	V
I_{EE}	Power Supply Current			120		mA
I_{CCA}	Analog Supply Current			10		mA

Table 4B. LVCMOS/LVTTL DC Characteristics, $V_{CC} = V_{CCA} = V_{CCO} = 3.3V±5\%$, T_A = 0°C to 70°C

Symbol	Parameter		Test Conditions	Minimum	Typical	Maximum	Units
V_{IH}	Input High Voltage	TEST_CLK		2		V_{CC} + 0.3	V
		VCO_SEL, S_LOAD, S_DATA, S_CLOCK, nP_LOAD, MR, M0:M8, N0:N2, XTAL_SEL		2		V_{CC} + 0.3	V
V_{IL}	Input Low Voltage	TEST_CLK		-0.3		1.3	V
		VCO_SEL, S_LOAD, S_DATA, S_CLOCK, nP_LOAD, M0:M8, N0:N2, XTAL_SEL		-0.3		0.8	V
I_{IH}	Input High Current	M0-M7, N0, N1, MR, S_CLOCK, S_DATA, S_LOAD, TEST_CLK, nP_LOAD	$V_{CC} = V_{IN}$ = 3.465V			150	µA
		M8, N2, XTAL_SEL, VCO_SEL	$V_{CC} = V_{IN}$ = 3.465V			5	µA
I_{IL}	Input Low Current	M0-M7, N0, N1, MR, S_CLOCK, S_DATA, S_LOAD, TEST_CLK, nP_LOAD	V_{CC} = 3.465V, V_{IN} = 0V	-5			µA
		M8, N2, XTAL_SEL, VCO_SEL	V_{CC} = 3.465V, V_{IN} = 0V	-150			µA
V_{OH}	Output High Voltage	TEST; NOTE 1		2.6			V
V_{OL}	Output Low Voltage	TEST; NOTE 1				0.5	V

NOTE 1: Outputs terminated with 50Ω to $V_{CCO}/2$.

Table 4C. LVPECL DC Characteristics, $V_{CC} = V_{CCA} = V_{CCO} = 3.3V±5\%$, $T_A = 0°C$ to $70°C$

Symbol	Parameter	Test Conditions	Minimum	Typical	Maximum	Units
V_{OH}	Output High Voltage; NOTE 1		V_{CC} - 1.4		V_{CC} - 1.0	V
V_{OL}	Output Low Voltage; NOTE 1		V_{CC} - 2.0		V_{CC} - 1.7	V
V_{SWING}	Peak-to-Peak Output Voltage Swing		0.6		1.0	V

NOTE 1: Outputs terminated with 50Ω to V_{CCO} - 2V. See "Parameter Information" section, "3.3V Output Load Test Circuit" figure.

Table 5. Input Frequency Characteristics, $V_{CC} = V_{CCA} = V_{CCO} = 3.3V±5\%$, $T_A = 0°C$ to $70°C$

Symbol	Parameter		Test Conditions	Minimum	Typical	Maximum	Units
f_{IN}	Input Frequency	TEST_CLK; NOTE 1		14		25	MHz
		XTAL1, XTAL2; NOTE 1		14		25	MHz
		S_CLOCK				TBD	MHz

NOTE 1: For the input crystal and reference frequency range, the M value must be set for the VCO to operate within the 200MHz to 700MHz range. Using the minimum input frequency of 14MHz, valid values of M are 115 ≤ M ≤ 400. Using the maximum frequency of 25MHz, valid values of M are 64 ≤ M ≤ 224.

Table 6. Crystal Characteristics

Parameter	Test Conditions	Minimum	Typical	Maximum	Units
Mode of Oscillation		Fundamental			
Frequency		14		25	MHz
Equivalent Series Resistance (ESR)		50		70	Ω
Shunt Capacitance				7	pF

Table 7. AC Characteristics, $V_{CC} = V_{CCA} = V_{CCO} = 3.3V±5\%$, $T_A = 0°C$ to $70°C$

Symbol	Parameter		Test Conditions	Minimum	Typical	Maximum	Units
F_{MAX}	Output Frequency					600	MHz
*t*jit(cc)	Cycle-to-Cycle Jitter; NOTE 1, 3				17		ps
*t*jit(per)	Period Jitter, RMS; NOTE 1				2.6		ps
*t*sk(o)	Output Skew; NOTE 2, 3					50	ps
t_R	Output Rise Time			200		700	ps
t_F	Output Fall Time			200		700	ps
t_S	Setup Time	M, N to nP_LOAD		5			ns
		S_DATA to S_CLOCK		5			ns
		S_CLOCK to S_LOAD		5			ns
t_H	Hold Time	M, N to nP_LOAD		5			ns
		S_DATA to S_CLOCK		5			ns
		S_CLOCK to S_LOAD		5			ns
odc	Output Duty Cycle			47		53	%
t_{LOCK}	PLL Lock Time					1	ms

Parameter Measurement Information section.
NOTE 1: Jitter performance using XTAL inputs.
NOTE 2: Defined as skew between outputs at the same supply voltage and with equal load conditions. Measured at the output differential cross points.
NOTE 3: This parameter is defined in accordance with JEDEC Standard 65.

Parameter Measurement Information

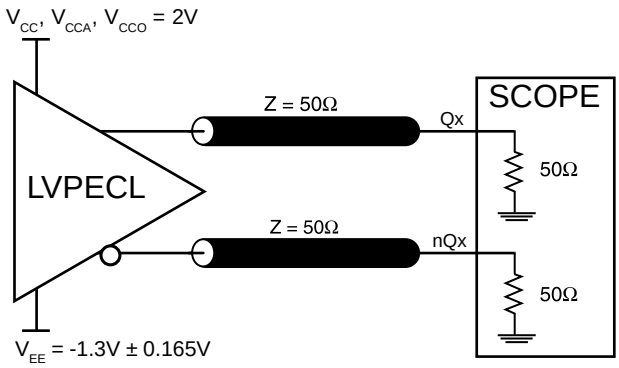

3.3V Output Load AC Test Circuit

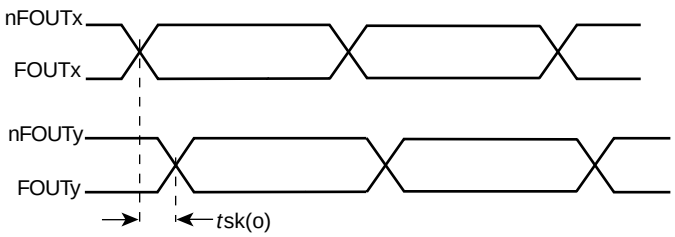

Output Skew

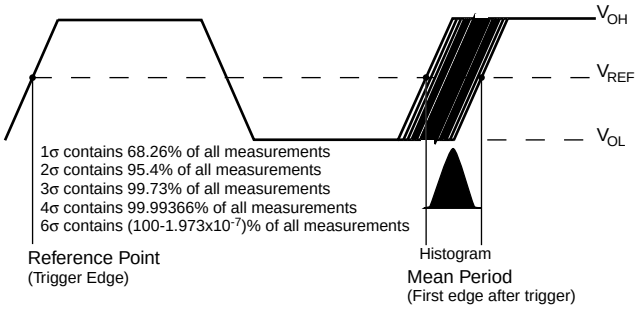

Period Jitter

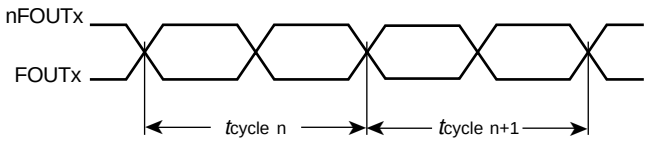

$t_{jit(cc)} = t_{cycle\ n} - t_{cycle\ n+1}$

1000 Cycles

Cycle-to-Cycle Jitter

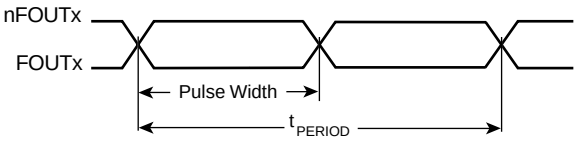

$$odc = \frac{t_{PW}}{t_{PERIOD}}$$

odc & t_{PERIOD}

Application Information

Power Supply Filtering Techniques

As in any high speed analog circuitry, the power supply pins are vulnerable to random noise. The ICS8430-51 provides separate power supplies to isolate any high switching noise from the outputs to the internal PLL. V_{CC}, V_{CCA}, and V_{CCO} should be individually connected to the power supply plane through vias, and bypass capacitors should be used for each pin. To achieve optimum jitter performance, power supply isolation is required. *Figure 3* illustrates how a 10Ω resistor along with a 10µF and a .01µF bypass capacitor should be connected to each V_{CCA} pin.

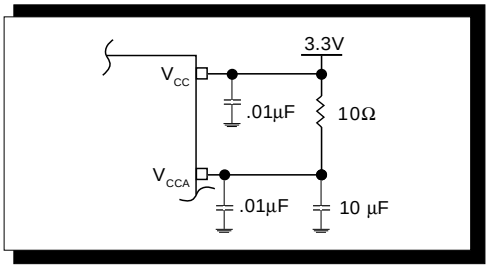

Figure 3. Power Supply Filtering

Crystal Input and Oscillator Interface

The ICS8430-51 features an internal oscillator that uses an external quartz crystal as the source of its reference frequency. A 16MHz crystal divided by 16 before being sent to the phase detector provides the reference frequency. The oscillator is a series resonant, multi-vibrator type design. This design provides better stability and eliminates the need for large on chip capacitors. Though a series resonant crystal is preferred, a parallel resonant crystal can be used. A parallel resonant mode crystal used in a series resonant circuit will exhibit a frequency of oscillation a few hundred ppm lower than specified. A few hundred ppm translates to KHz inaccuracy. In general computing applications this level of inaccuracy is irrelevant. If better ppm accuracy is required, an external capacitor can be added to a parallel resonant crystal in series to pin 24. *Figure 4A* shows how to interface with a crystal.

Figures 4A, 4B, and 4C show various crystal parameters which are recommended only as guidelines. *Figure 4A* shows how to interface a capacitor with a parallel resonant crystal. *Figure 3B* shows the capacitor value needed for the optimum ppm performance over various parallel resonant crystals. *Figure 4C* shows the recommended tuning capacitance for various parallel resonant crystals.

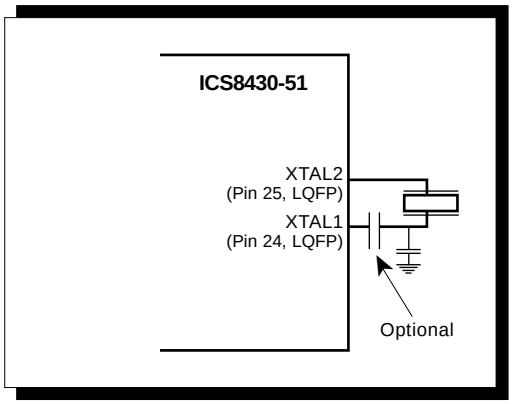

Figure 4A. Crystal Interface

Figure 4B. Recommended tuning capacitance for various parallel resonant crystals.

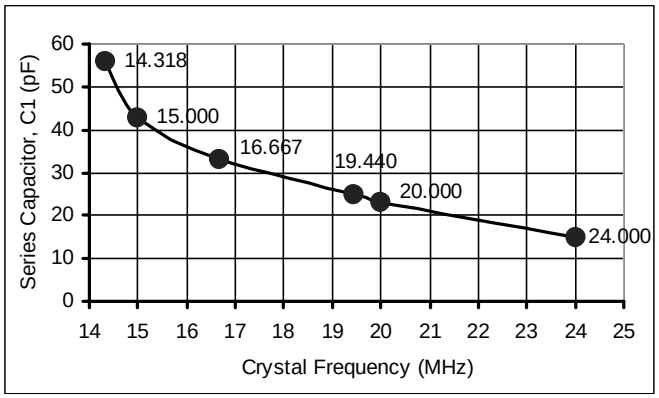

Figure 4C. Recommended tuning capacitance for various parallel resonant crystals.

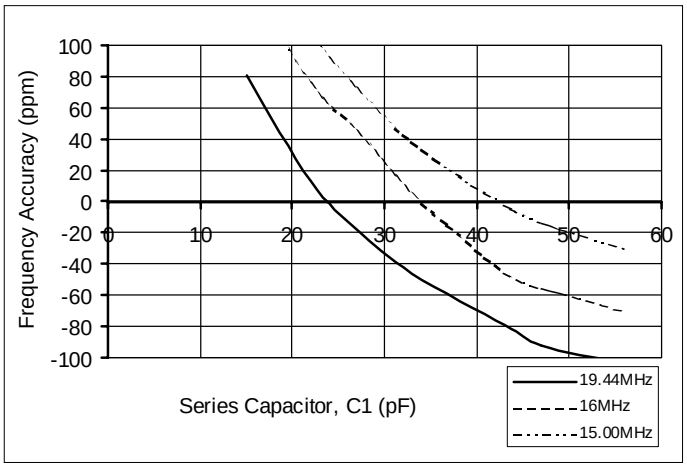

Termination for LVPECL Outputs

The clock layout topology shown below is a typical termination for LVPECL outputs. The two different layouts mentioned are recommended only as guidelines.

FOUT and nFOUT are low impedance follower outputs that generate ECL/LVPECL compatible outputs. Therefore, terminating resistors (DC current path to ground) or current sources must be used for functionality. These outputs are designed to drive 50Ω transmission lines. Matched impedance techniques should be used to maximize operating frequency and minimize signal distortion. *Figures 5A and 5B* show two different layouts which are recommended only as guidelines. Other suitable clock layouts may exist and it would be recommended that the board designers simulate to guarantee compatibility across all printed circuit and clock component process variations.

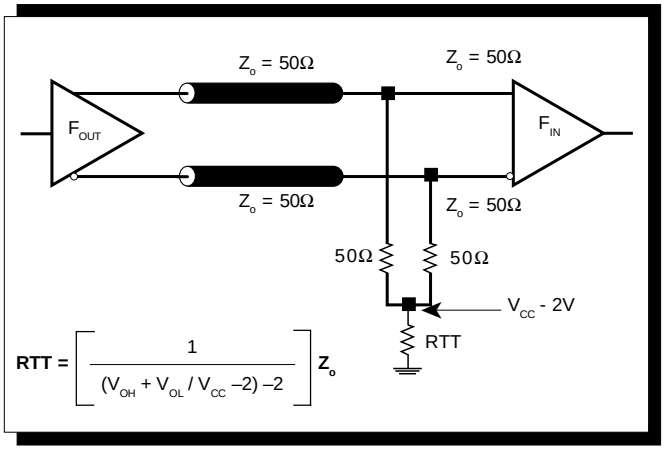

Figure 5A. LVPECL Output Termination

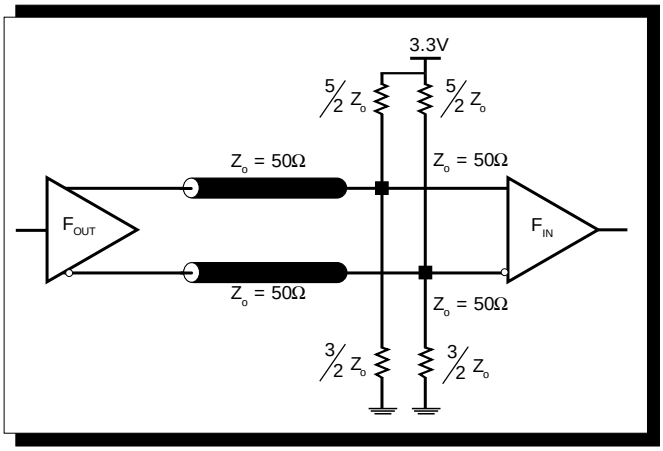

Figure 5B. LVPECL Output Termination

Layout Guideline

The schematic of the ICS8430-51 layout example used in this layout guideline is shown in *Figure 6A*. The ICS8430-51 recommended PCB board layout for this example is shown in *Figure 6B*. This layout example is used as a general guideline. The layout in the actual system will depend on the selected component types, the density of the components, the density of the traces, and the stack up of the P.C. board.

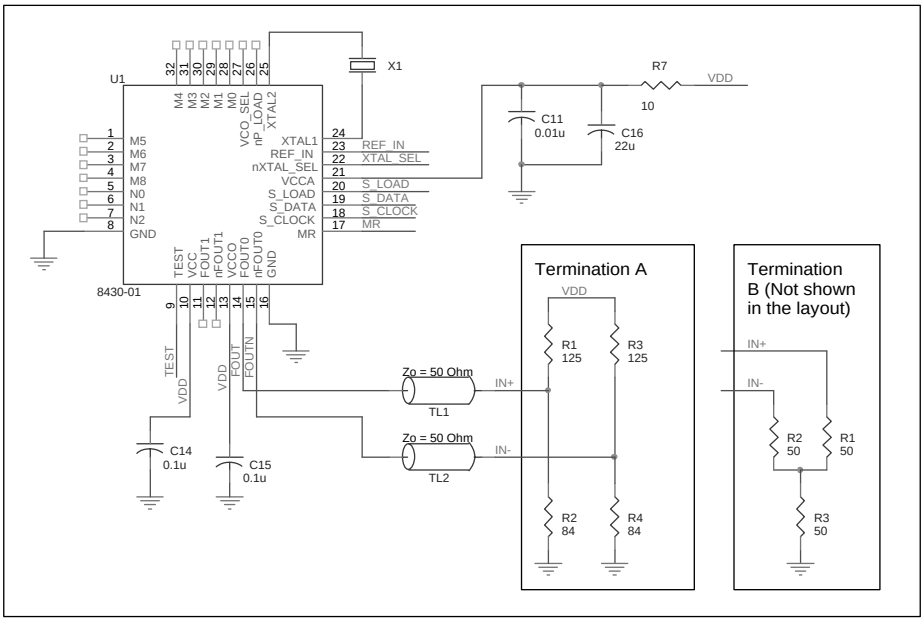

Figure 6A. Schematic of Recommended Layout

The following component footprints are used in this layout example: All the resistors and capacitors are size 0603.

Power and Grounding

Place the decoupling capacitors C14 and C15 as close as possible to the power pins. If space allows, placing the decoupling capacitor at the component side is preferred. This can reduce unwanted inductance between the decoupling capacitor and the power pin generated by the via.

Maximize the pad size of the power (ground) at the decoupling capacitor. Maximize the number of vias between power (ground) and the pads. This can reduce the inductance between the power (ground) plane and the component power (ground) pins.

If V_{CCA} shares the same power supply with V_{CC}, insert the RC filter R7, C11, and C16 in between. Place this RC filter as close to the V_{CCA} as possible.

Clock Traces and Termination

The component placements, locations and orientations should be arranged to achieve the best clock signal quality. Poor clock signal quality can degrade the system performance or cause system failure. In the synchronous high-speed digital system, the clock signal is less tolerable to poor signal quality than other signals. Any ringing on the rising or falling edge or excessive ring back can cause system failure. The trace shape and the trace delay might be restricted by the available space on the board and the component location. While routing the traces, the clock signal traces should be routed first and should be locked prior to routing other signal traces.

- The traces with 50Ω transmission lines TL1 and TL2 at FOUT and nFOUT should have equal delay and run adjacent to each other. Avoid sharp angles on the clock trace. Sharp angle turns cause the characteristic impedance to change on the transmission lines.
- Keep the clock trace on the same layer. Whenever possible, avoid any vias on the clock traces. Any via on the trace can affect the trace characteristic impedance and hence degrade signal quality.
- To prevent cross talk, avoid routing other signal traces in parallel with the clock traces. If running parallel traces is unavoidable, allow more space between the clock trace and the other signal trace.
- Make sure no other signal trace is routed between the clock trace pair.

The matching termination resistors R1, R2, R3 and R4 should be located as close to the receiver input pins as possible. Other termination schemes can also be used but are not shown in this example.

Crystal

The crystal X1 should be located as close as possible to the pins 24 (XTAL1) and 25 (XTAL2). The trace length between the X1 and U1 should be kept to a minimum to avoid unwanted parasitic inductance and capacitance. Other signal traces should not be routed near the crystal traces.

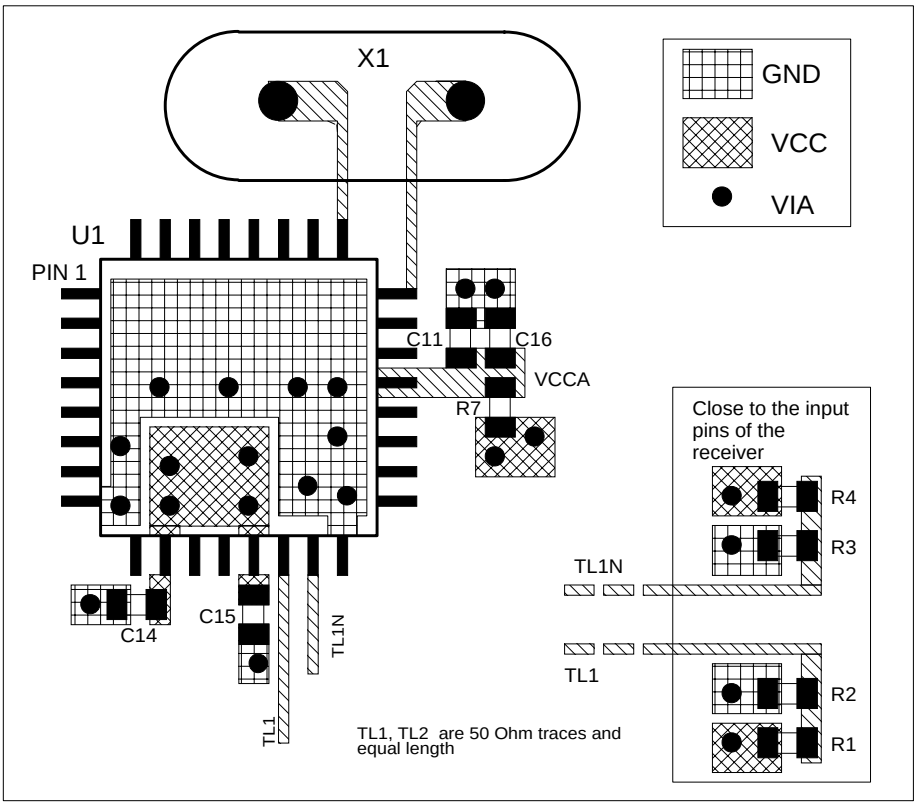

Figure 6B. PCB Board Layout for ICS8430-51

Power Considerations

This section provides information on power dissipation and junction temperature for the ICS8430-51.
Equations and example calculations are also provided.

1. Power Dissipation.
The total power dissipation for the ICS8430-51 is the sum of the core power plus the power dissipated in the load(s).
The following is the power dissipation for V_{CC} = 3.3V + 5% = 3.465V, which gives worst case results.
NOTE: Please refer to Section 3 for details on calculating power dissipated in the load.

- Power $(core)_{MAX} = V_{CC_MAX} * I_{EE_MAX}$ = 3.465V * 120mA = **416mW**
- Power $(outputs)_{MAX}$ = **30.2mW/Loaded Output pair**
  If all outputs are loaded, the total power is 2 * 30.2mW = **60.4mW**

Total Power$_{_MAX}$ (3.465V, with all outputs switching) = 416mW + 60.4mW = **476.4mW**

2. Junction Temperature.
Junction temperature, Tj, is the temperature at the junction of the bond wire and bond pad and directly affects the reliability of the device. The maximum recommended junction temperature for HiPerClockS™ devices is 125°C.

The equation for Tj is as follows: $Tj = \theta_{JA} * Pd_total + T_A$

Tj = Junction Temperature

θ_{JA} = Junction-to-Ambient Thermal Resistance

Pd_total = Total Device Power Dissipation (example calculation is in section 1 above)

T_A = Ambient Temperature

In order to calculate junction temperature, the appropriate junction-to-ambient thermal resistance θ_{JA} must be used. Assuming a moderate air flow of 200 linear feet per minute and a multi-layer board, the appropriate value is 42.1°C/W per Table 8 below.

Therefore, Tj for an ambient temperature of 70°C with all outputs switching is:
70°C + 0.476W * 42.1°C/W = 90°C. This is well below the limit of 125°C.

This calculation is only an example. Tj will obviously vary depending on the number of loaded outputs, supply voltage, air flow, and the type of board (single layer or multi-layer).

Table 8. Thermal Resistance θ_{JA} for 32-pin LQFP, Forced Convection

θ_{JA} by Velocity (Linear Feet per Minute)	0	200	500
Single-Layer PCB, JEDEC Standard Test Boards	67.8°C/W	55.9°C/W	50.1°C/W
Multi-Layer PCB, JEDEC Standard Test Boards	47.9°C/W	42.1°C/W	39.4°C/W

NOTE: Most modern PCB designs use multi-layered boards. The data in the second row pertains to most designs.

3. Calculations and Equations.

The purpose of this section is to derive the power dissipated into the load.

LVPECL output driver circuit and termination are shown in *Figure 7.*

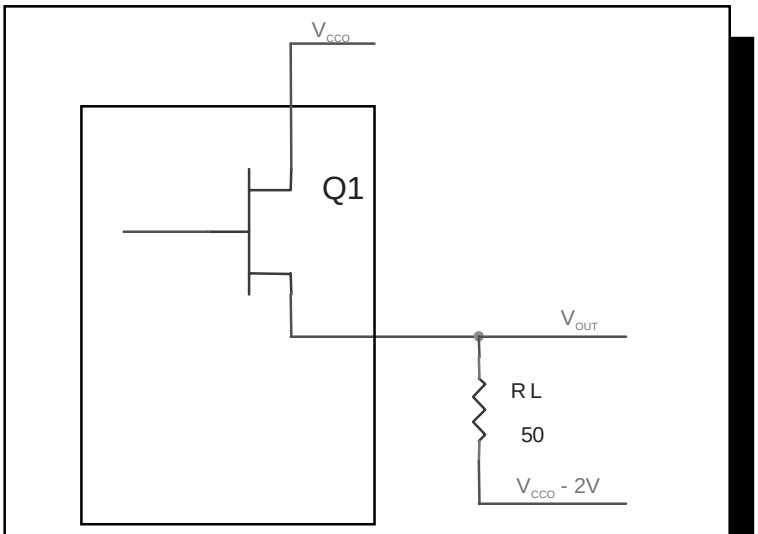

Figure 7. LVPECL Driver Circuit and Termination

To calculate worst case power dissipation into the load, use the following equations which assume a 50Ω load, and a termination voltage of V_{CCO} - 2V.

- For logic high, $V_{OUT} = V_{OH_MAX} = \mathbf{V_{CCO_MAX} - 1.0V}$

  $(V_{CCO_MAX} - V_{OH_MAX}) = \mathbf{1.0V}$

- For logic low, $V_{OUT} = V_{OL_MAX} = \mathbf{V_{CCO_MAX} - 1.7V}$

  $(V_{CCO_MAX} - V_{OL_MAX}) = \mathbf{1.7V}$

Pd_H is power dissipation when the output drives high.
Pd_L is the power dissipation when the output drives low.

$Pd_H = [(V_{OH_MAX} – (V_{CCO_MAX} - 2V))/R_L] * (V_{CCO_MAX} - V_{OH_MAX}) = [(2V - (V_{CCO_MAX} - V_{OH_MAX}))/R_L] * (V_{CCO_MAX} - V_{OH_MAX}) =$
$[(2V - 1V)/50\Omega] * 1V =$ **20.0mW**

$Pd_L = [(V_{OL_MAX} – (V_{CCO_MAX} - 2V))/R_L] * (V_{CCO_MAX} - V_{OL_MAX}) = [(2V - (V_{CCO_MAX} - V_{OL_MAX}))/R_L] * (V_{CCO_MAX} - V_{OL_MAX}) =$
$[(2V - 1.7V)/50\Omega] * 1.7V =$ **10.2mW**

Total Power Dissipation per output pair = Pd_H + Pd_L = **30.2mW**

Reliability Information

Table 9. θ_{JA} vs. Air Flow Table

θ_{JA} by Velocity (Linear Feet per Minute)	0	200	500
Single-Layer PCB, JEDEC Standard Test Boards	67.8°C/W	55.9°C/W	50.1°C/W
Multi-Layer PCB, JEDEC Standard Test Boards	47.9°C/W	42.1°C/W	39.4°C/W

NOTE: Most modern PCB designs use multi-layered boards. The data in the second row pertains to most designs.

Transistor Count

The transistor count for ICS8430-51 is: 4,534

Package Outline - Y Suffix

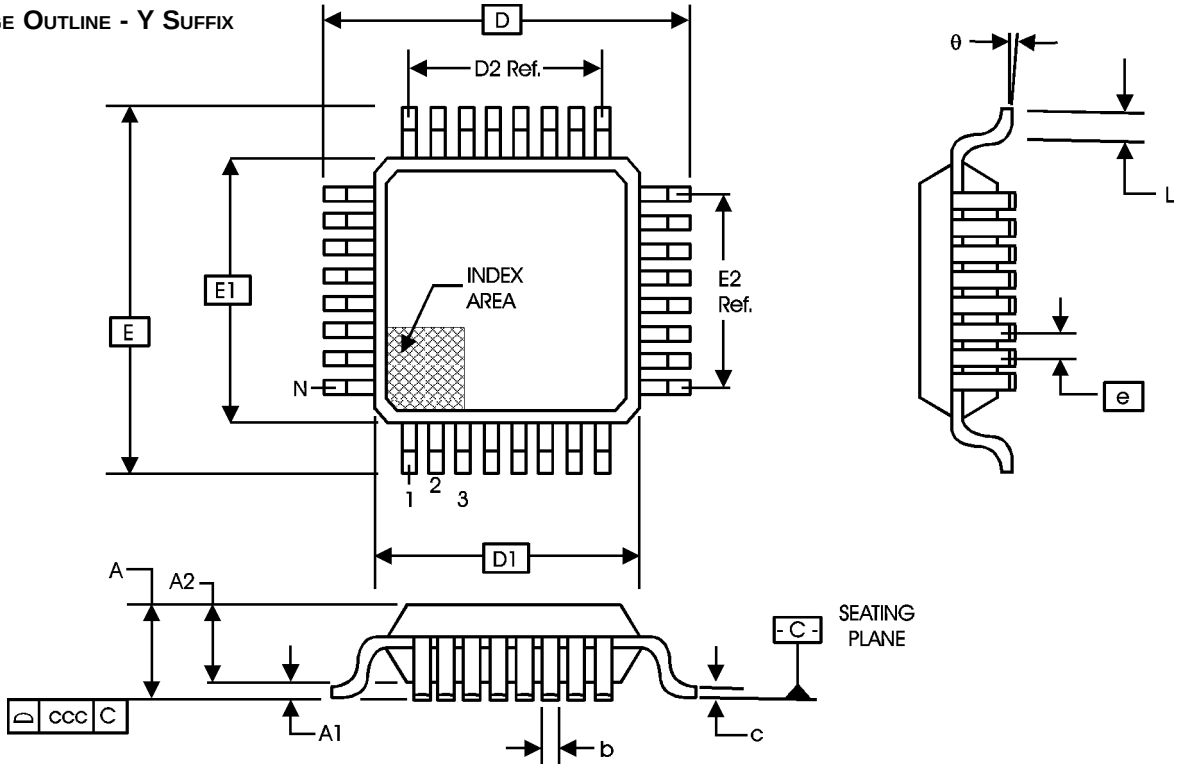

Table 10. Package Dimensions

JEDEC VARIATION ALL DIMENSIONS IN MILLIMETERS			
SYMBOL	BBA		
	MINIMUM	NOMINAL	MAXIMUM
N		32	
A			1.60
A1	0.05		0.15
A2	1.35	1.40	1.45
b	0.30	0.37	0.45
c	0.09		0.20
D		9.00 BASIC	
D1		7.00 BASIC	
D2		5.60	
E		9.00 BASIC	
E1		7.00 BASIC	
E2		5.60	
e		0.80 BASIC	
L	0.45	0.60	0.75
θ	0°		7°
ccc			0.10

Reference Document: JEDEC Publication 95, MS-026

Table 11. Ordering Information

Part/Order Number	Marking	Package	Count	Temperature
ICS8430AY-51	ICS8430AY-51	32 Lead LQFP	250 per tray	0°C to 70°C
ICS8430AY-51T	ICS8430AY-51	32 Lead LQFP on Tape and Reel	1000	0°C to 70°C

While the information presented herein has been checked for both accuracy and reliability, Integrated Circuit Systems, Incorporated (ICS) assumes no responsibility for either its use or for infringement of any patents or other rights of third parties, which would result from its use. No other circuits, patents, or licenses are implied. This product is intended for use in normal commercial applications. Any other applications such as those requiring extended temperature range, high reliability, or other extraordinary environmental requirements are not recommended without additional processing by ICS. ICS reserves the right to change any circuitry or specifications without notice. ICS does not authorize or warrant any ICS product for use in life support devices or critical medical instruments.