FEMTOCLOCKS™ CRYSTAL-TO-3.3V, 2.5V LVPECL CLOCK GENERATOR

ICS843031-01

General Description

The ICS843031-01 is an 10Gb Ethernet Clock Generator and a member of the HiPerClocks™ family of high performance devices from IDT. The ICS843031-01 uses an 18pF parallel resonant crystal. The ICS843031-01 has excellent <1ps phase jitter performance, over the 1.875MHz - 20MHz integration range. The ICS843031-01 is packaged in a small 8-pin TSSOP, making it ideal for use in systems with limited board space.

Features

- One differential 3.3V or 2.5V LVPECL output
- Crystal oscillator interface designed for 25MHz, 18pF parallel resonant crystal
- Output frequencies: 280MHz – 340MHz
- VCO range: 560MHz - 680MHz
- RMS phase jitter @ 312.5MHz, using a 25MHz crystal (1.875MHz - 20MHz): 0.46ps (typical)
- Full 3.3V or 2.5V operating supply
- 0°C to 70°C ambient operating temperature
- Available in both standard (RoHS 5) and lead-free (RoHS 6) packages

Common Configuration Table

Inputs				Output Frequency (MHz)
Crystal Frequency (MHz)	M	N	Multiplication Value M/N	
25	25	2	25	312.5

Block Diagram

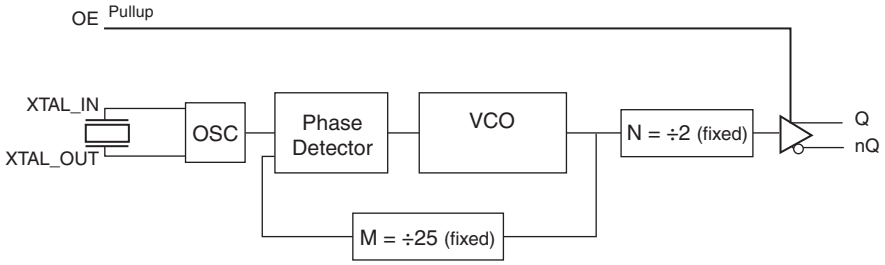

Pin Assignment

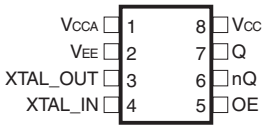

ICS843031-01

8-Lead TSSOP
4.40mm x 3.0mm x 0.925mm package body
G Package
Top View

TABLE 1. PIN DESCRIPTIONS

Number	Name	Type		Description
1	V_{CCA}	Power		Analog supply pin.
2	V_{EE}	Power		Negative supply pin.
3, 4	XTAL_OUT, XTAL_IN	Input		Crystal oscillator interface. XTAL_IN is the input, XTAL_OUT is the output.
5	OE	Input	Pullup	Output Enable pin. LVCMOS/LVTTL interface levels.
6, 7	nQ, Q	Output		Differential clock outputs. LVPECL interface levels.
8	V_{CC}	Power		Power supply pin.

NOTE: *Pullup* refers to internal input resistors. See Table 2, Pin Characteristics, for typical values.

TABLE 2. PIN CHARACTERISTICS

Symbol	Parameter	Test Conditions	Minimum	Typical	Maximum	Units
C_{IN}	Input Capacitance			4		pF
$R_{PULLDOWN}$	Input Pullup Resistor			51		kΩ

TABLE 3. OE FUNCTION TABLE

Input	Outputs
OE	**Q/nQ**
0	Hi-Z
1	Enabled

ABSOLUTE MAXIMUM RATINGS

Supply Voltage, V_{CC}	4.6V
Inputs, V_I	-0.5V to V_{CC} + 0.5V
Outputs, I_O	
Continuous Current	50mA
Surge Current	100mA
Package Thermal Impedance, θ_{JA}	101.7°C/W (0 mps)
Storage Temperature, T_{STG}	-65°C to 150°C

NOTE: Stresses beyond those listed under Absolute Maximum Ratings may cause permanent damage to the device. These ratings are stress specifications only. Functional operation of product at these conditions or any conditions beyond those listed in the *DC Characteristics* or *AC Characteristics* is not implied. Exposure to absolute maximum rating conditions for extended periods may affect product reliability.

TABLE 4A. POWER SUPPLY DC CHARACTERISTICS, V_{CC} = 3.3V±5%, TA = 0°C TO 70°C

Symbol	Parameter	Test Conditions	Minimum	Typical	Maximum	Units
V_{CC}	Power Supply Voltage		3.135	3.3	3.465	V
V_{CCA}	Analog Supply Voltage		V_{CC} – 0.12	3.3	3.465	V
I_{CCA}	Analog Supply Current				12	mA
I_{EE}	Power Supply Current				105	mA

TABLE 4B. POWER SUPPLY DC CHARACTERISTICS, V_{CC} = 2.5V±5%, TA = 0°C TO 70°C

Symbol	Parameter	Test Conditions	Minimum	Typical	Maximum	Units
V_{CC}	Power Supply Voltage		2.375	2.5	2.625	V
V_{CCA}	Analog Supply Voltage		V_{CC} – 0.12	2.5	2.625	V
I_{CCA}	Analog Supply Current				12	mA
I_{EE}	Power Supply Current				90	mA

TABLE 4C. LVCMOS/LVTTL DC CHARACTERISTICS, V_{CC} = 3.3V±5% OR 2.5V±5%, TA = 0°C TO 70°C

Symbol	Parameter	Test Conditions	Minimum	Typical	Maximum	Units
V_{IH}	Input High Voltage	V_{CC} = 3.3V	2		V_{CC} + 0.3	V
		V_{CC} = 2.5V	1.7		V_{CC} + 0.3	V
V_{IL}	Input Low Voltage	V_{CC} = 3.3V	-0.3		0.8	V
		V_{CC} = 2.5V	-0.3		0.7	V
I_{IH}	Input High Current	V_{CC} = V_{IN} = 3.465V or 2.625V			5	µA
I_{IL}	Input Low Current	V_{CC} = 3.465V or 2.625V, V_{IN} = 0V	-150			µA

TABLE 4D. LVPECL DC CHARACTERISTICS, V_{CC} = 3.3V±5% OR 2.5V±5%, TA = 0°C TO 70°C

Symbol	Parameter	Test Conditions	Minimum	Typical	Maximum	Units
V_{OH}	Output High Voltage; NOTE 1		V_{CC} - 1.4		V_{CC} - 0.9	V
V_{OL}	Output Low Voltage; NOTE 1		V_{CC} - 2.0		V_{CC} - 1.7	V
V_{SWING}	Peak-to-Peak Output Voltage Swing		0.6		1.0	V

NOTE 1: Outputs terminated with 50Ω to V_{CC} - 2V.

TABLE 5. CRYSTAL CHARACTERISTICS

Parameter	Test Conditions	Minimum	Typical	Maximum	Units
Mode of Oscillation			Fundamental		
Frequency		22.4	25	27.2	MHz
Equivalent Series Resistance (ESR)				40	Ω
Shunt Capacitance				7	pF
Drive Level				300	mW

TABLE 6A. AC CHARACTERISTICS, V_{CC} = 3.3V±5%, TA = 0°C TO 70°C

Symbol	Parameter	Test Conditions	Minimum	Typical	Maximum	Units
f_{OUT}	Output Frequency		280	312.5	340	MHz
*t*jit(Ø)	RMS Phase Jitter (Random); NOTE 1	312.5MHz @ Integration Range: 1.875MHz - 20MHz		0.46		ps
t_R / t_F	Output Rise/Fall Time	20% to 80%	150		500	ps
odc	Output Duty Cycle		48		52	%

NOTE 1: Please refer to the Phase Noise Plots following this section.

TABLE 6B. AC CHARACTERISTICS, V_{CC} = 2.5V±5%, TA = 0°C TO 70°C

Symbol	Parameter	Test Conditions	Minimum	Typical	Maximum	Units
f_{OUT}	Output Frequency		280	312.5	340	MHz
*t*jit(Ø)	RMS Phase Jitter (Random); NOTE 1	312.5MHz @ Integration Range: 1.875MHz - 20MHz		0.48		ps
t_R / t_F	Output Rise/Fall Time	20% to 80%	150		500	ps
odc	Output Duty Cycle		48		52	%

NOTE 1: Please refer to the Phase Noise Plots following this section.

TYPICAL PHASE NOISE AT 312.5MHZ AT 3.3V

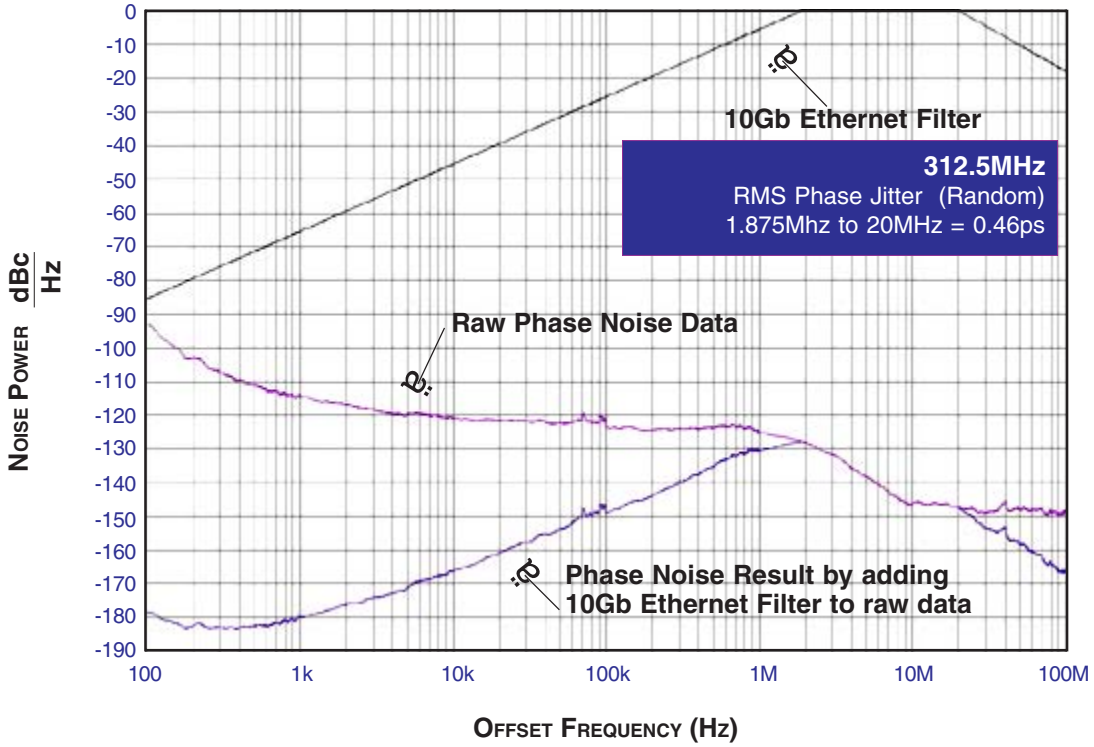

PARAMETER MEASUREMENT INFORMATION

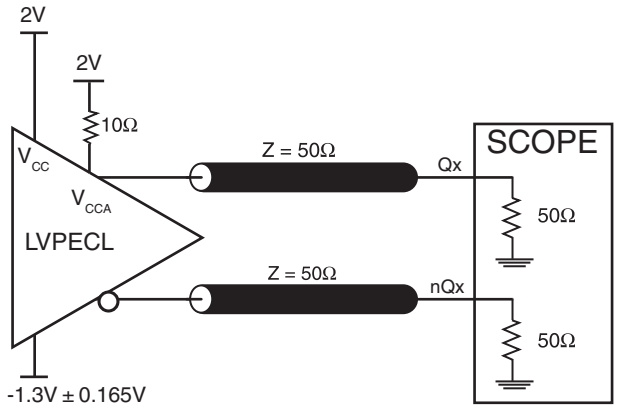

3.3V OUTPUT LOAD AC TEST CIRCUIT

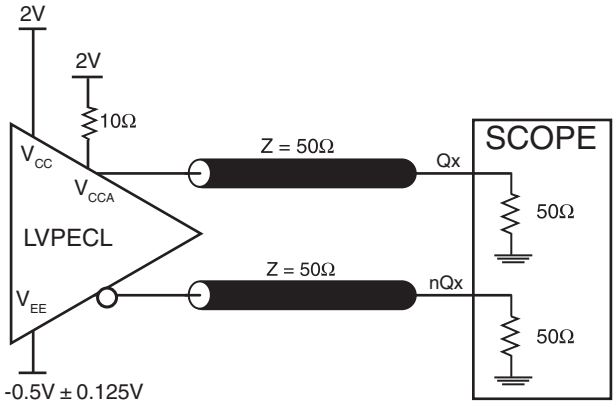

2.5V OUTPUT LOAD AC TEST CIRCUIT

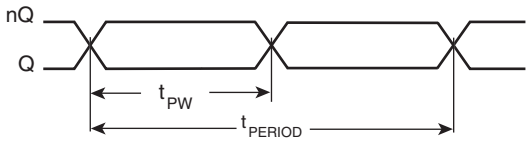

$$odc = \frac{t_{PW}}{t_{PERIOD}} \times 100\%$$

OUTPUT DUTY CYCLE/PULSE WIDTH/PERIOD

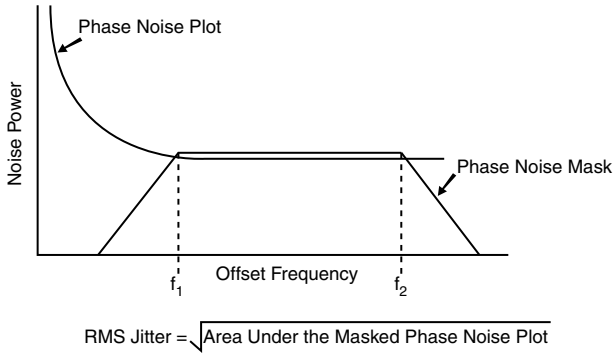

RMS PHASE JITTER

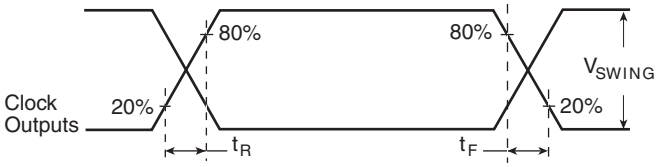

OUTPUT RISE/FALL TIME

APPLICATION INFORMATION

POWER SUPPLY FILTERING TECHNIQUES

As in any high speed analog circuitry, the power supply pins are vulnerable to random noise. The ICS843031-01 provides separate power supplies to isolate any high switching noise from the outputs to the internal PLL. V_{CC} and V_{CCA} should be individually connected to the power supply plane through vias, and bypass capacitors should be used for each pin. To achieve optimum jitter performance, power supply isolation is required. *Figure 1* illustrates how a 10Ω resistor along with a 10µF and a .01µF bypass capacitor should be connected to each V_{CCA} pin.

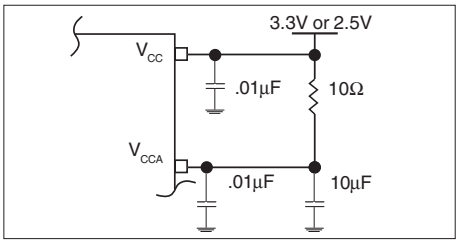

FIGURE 1. POWER SUPPLY FILTERING

CRYSTAL INPUT INTERFACE

The ICS843031-01 has been characterized with 18pF parallel resonant crystals. The capacitor values, C1 and C2, shown in *Figure 2* below were determined using a 25MHz, 18pF parallel resonant crystal and were chosen to minimize the ppm error. The optimum C1 and C2 values can be slightly adjusted for different board layouts.

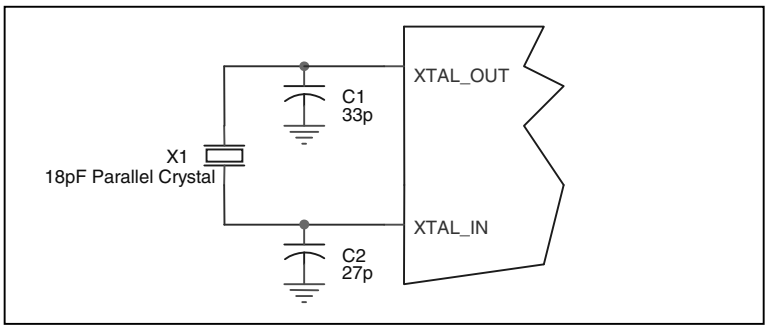

FIGURE 2. CRYSTAL INPUT INTERFACE

LVCMOS TO XTAL INTERFACE

The XTAL_IN input can accept a single-ended LVCMOS signal through an AC coupling capacitor. A general interface diagram is shown in *Figure 3.* The XTAL_OUT pin can be left floating. The input edge rate can be as slow as 10ns. For LVCMOS inputs, it is recommended that the amplitude be reduced from full swing to half swing in order to prevent signal interference with the power rail and to reduce noise. This configuration requires that the output impedance of the driver (Ro) plus the series resistance (Rs) equals the transmission line impedance. In addition, matched termination at the crystal input will attenuate the signal in half. This can be done in one of two ways. First, R1 and R2 in parallel should equal the transmission line impedance. For most 50Ω applications, R1 and R2 can be 100Ω. This can also be accomplished by removing R1 and making R2 50Ω.

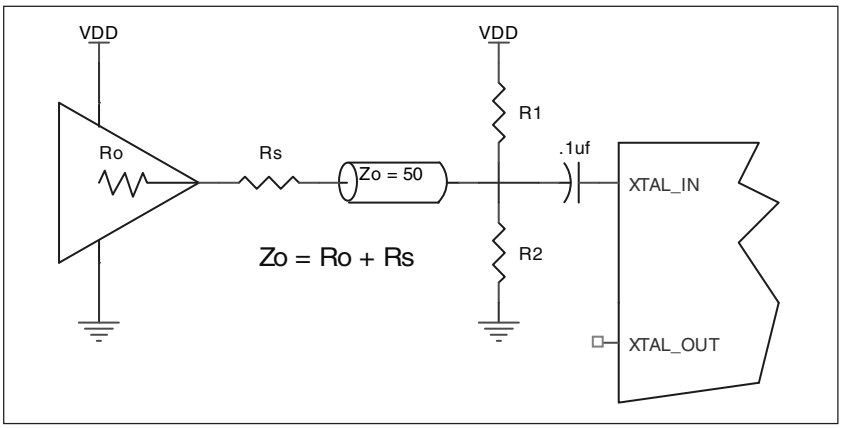

FIGURE 3. GENERAL DIAGRAM FOR LVCMOS DRIVER TO XTAL INPUT INTERFACE

TERMINATION FOR 3.3V LVPECL OUTPUT

The clock layout topology shown below is a typical termination for LVPECL outputs. The two different layouts mentioned are recommended only as guidelines.

FOUT and nFOUT are low impedance follower outputs that generate ECL/LVPECL compatible outputs. Therefore, terminating resistors (DC current path to ground) or current sources must be used for functionality. These outputs are designed to drive 50Ω transmission lines. Matched impedance techniques should be used to maximize operating frequency and minimize signal distortion. *Figures 4A and 4B* show two different layouts which are recommended only as guidelines. Other suitable clock layouts may exist and it would be recommended that the board designers simulate to guarantee compatibility across all printed circuit and clock component process variations.

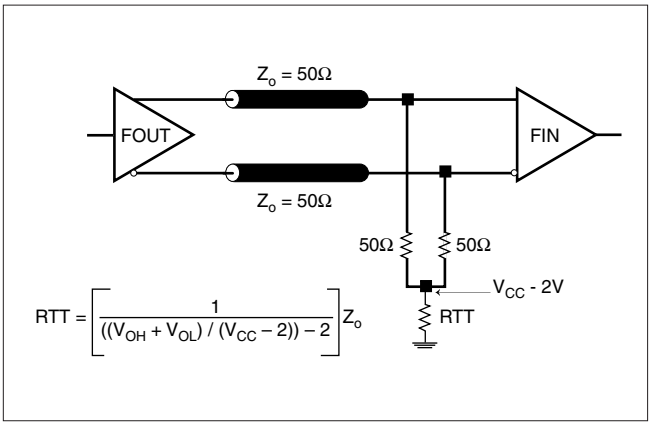

FIGURE 4A. LVPECL OUTPUT TERMINATION

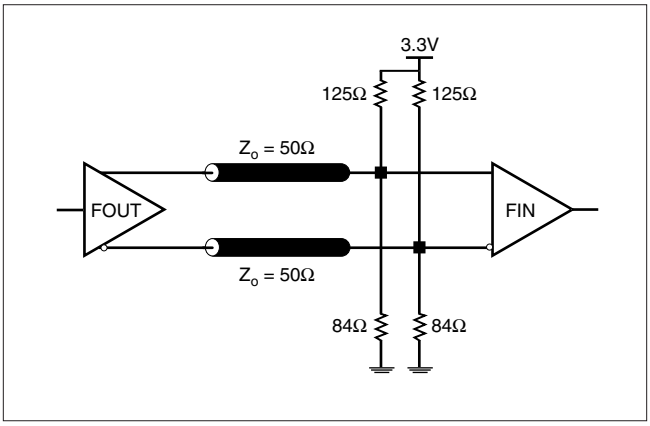

FIGURE 4B. LVPECL OUTPUT TERMINATION

TERMINATION FOR 2.5V LVPECL OUTPUT

Figure 5A and *Figure 5B* show examples of termination for 2.5V LVPECL driver. These terminations are equivalent to terminating 50Ω to V_{CC} - 2V. For V_{CC} = 2.5V, the V_{CC} - 2V is very close to ground level. The R3 in Figure 5B can be eliminated and the termination is shown in *Figure 5C.*

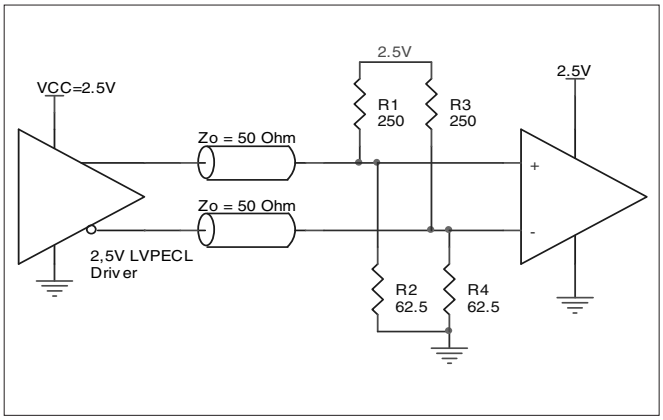

FIGURE 5A. 2.5V LVPECL DRIVER TERMINATION EXAMPLE

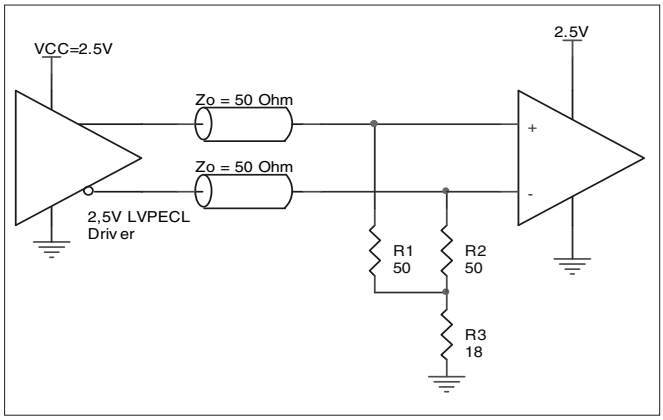

FIGURE 5B. 2.5V LVPECL DRIVER TERMINATION EXAMPLE

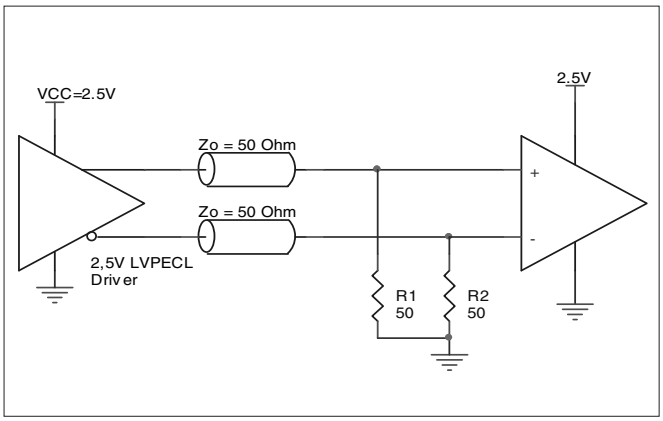

FIGURE 5C. 2.5V LVPECL TERMINATION EXAMPLE

POWER CONSIDERATIONS

This section provides information on power dissipation and junction temperature for the ICS843031-01.
Equations and example calculations are also provided.

1. Power Dissipation.
The total power dissipation for the ICS843031-01 is the sum of the core power plus the power dissipated in the load(s).
The following is the power dissipation for V_{CC} = 3.3V + 5% = 3.465V, which gives worst case results.
NOTE: Please refer to Section 3 for details on calculating power dissipated in the load.

- Power $(core)_{MAX} = V_{CC_MAX} * I_{EE_MAX}$ = 3.465V * 105mA = **363.8mW**
- Power $(outputs)_{MAX}$ = **30mW/Loaded Output pair**

Total Power$_{_MAX}$ (3.465V, with all outputs switching) = 363.8mW + 30mW = **393.8mW**

2. Junction Temperature.
Junction temperature, Tj, is the temperature at the junction of the bond wire and bond pad and directly affects the reliability of the device. The maximum recommended junction temperature for HiPerClockS™ devices is 125°C.

The equation for Tj is as follows: $Tj = \theta_{JA} * Pd_total + T_A$

Tj = Junction Temperature

θ_{JA} = Junction-to-Ambient Thermal Resistance

Pd_total = Total Device Power Dissipation (example calculation is in section 1 above)

T_A = Ambient Temperature

In order to calculate junction temperature, the appropriate junction-to-ambient thermal resistance θ_{JA} must be used. Assuming a moderate air flow of 1 meter per second and a multi-layer board, the appropriate value is 90.5°C/W per Table 7 below.

Therefore, Tj for an ambient temperature of 70°C with all outputs switching is:
70°C + 0.394W * 90.5°C/W = 105.6°C. This is well below the limit of 125°C.

This calculation is only an example. Tj will obviously vary depending on the number of loaded outputs, supply voltage, air flow, and the type of board (single layer or multi-layer).

TABLE 7. THERMAL RESISTANCE θ_{JA} FOR 8-PIN TSSOP, FORCED CONVECTION

θ_{JA} by Velocity (Meters per Second)			
	0	**1**	**2.5**
Multi-Layer PCB, JEDEC Standard Test Boards	101.7°C/W	90.5°C/W	89.8°C/W

3. Calculations and Equations.
The purpose of this section is to derive the power dissipated into the load.
LVPECL output driver circuit and termination are shown in *Figure 6.*

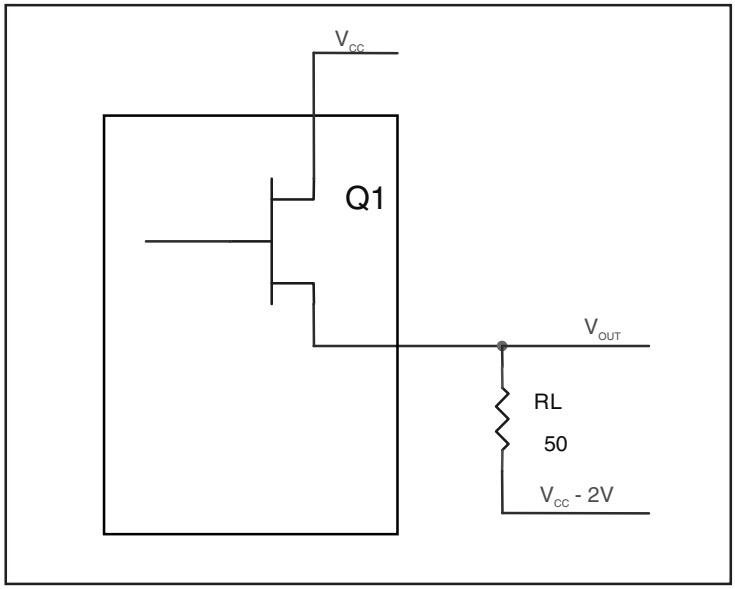

FIGURE 6. LVPECL DRIVER CIRCUIT AND TERMINATION

To calculate worst case power dissipation into the load, use the following equations which assume a 50Ω load, and a termination voltage of V_{CC} - 2V.

- For logic high, $V_{OUT} = V_{OH_MAX} =$ **V_{CC_MAX} – 0.9V**

  $(V_{CC_MAX} - V_{OH_MAX})$ = **0.9V**

- For logic low, $V_{OUT} = V_{OL_MAX} =$ **V_{CC_MAX} – 1.7V**

  $(V_{CC_MAX} - V_{OL_MAX})$ = **1.7V**

Pd_H is power dissipation when the output drives high.
Pd_L is the power dissipation when the output drives low.

$Pd_H = [(V_{OH_MAX} – (V_{CC_MAX} - 2V))/R_L] * (V_{CC_MAX} - V_{OH_MAX}) = [(2V - (V_{CC_MAX} - V_{OH_MAX}))/R_L] * (V_{CC_MAX} - V_{OH_MAX}) =$
[(2V - 0.9V)/50Ω] * 0.9V = **19.8mW**

$Pd_L = [(V_{OL_MAX} – (V_{CC_MAX} - 2V))/R_L] * (V_{CC_MAX} - V_{OL_MAX}) = [(2V - (V_{CC_MAX} - V_{OL_MAX}))/R_L] * (V_{CC_MAX} - V_{OL_MAX}) =$
[(2V - 1.7V)/50Ω] * 1.7V = **10.2mW**

Total Power Dissipation per output pair = Pd_H + Pd_L = **30mW**

RELIABILITY INFORMATION

TABLE 8. θ_{JA} VS. AIR FLOW TABLE FOR 8 LEAD TSSOP

θ_{JA} by Velocity (Meters per Second)			
	0	**1**	**2.5**
Multi-Layer PCB, JEDEC Standard Test Boards	101.7°C/W	90.5°C/W	89.8°C/W

TRANSISTOR COUNT

The transistor count for ICS843031-01 is: 2377

PACKAGE OUTLINE - G SUFFIX FOR 8 LEAD TSSOP

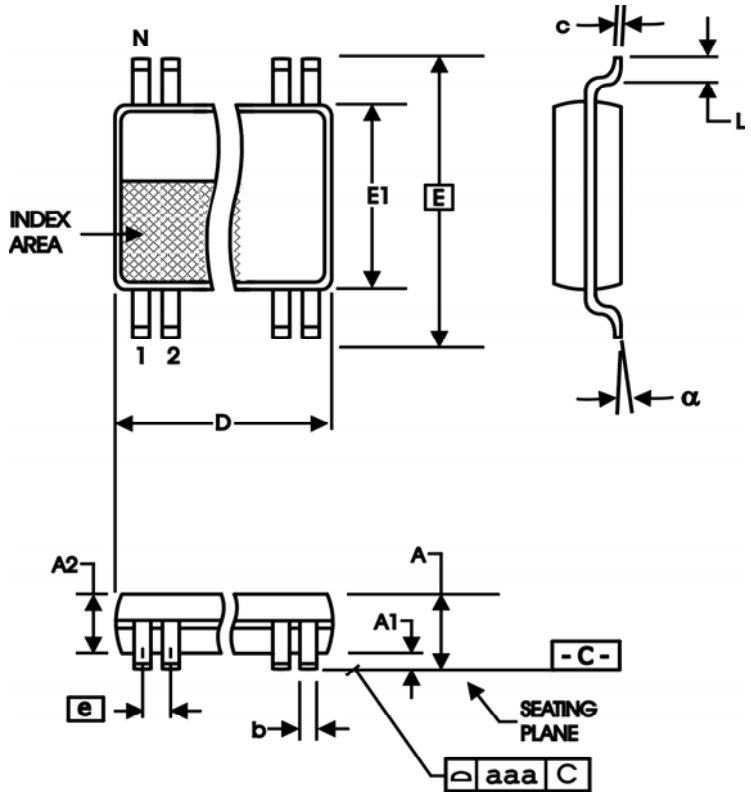

TABLE 9. PACKAGE DIMENSIONS

SYMBOL	Millimeters	
	Minimum	Maximum
N	8	
A	--	1.20
A1	0.05	0.15
A2	0.80	1.05
b	0.19	0.30
c	0.09	0.20
D	2.90	3.10
E	6.40 BASIC	
E1	4.30	4.50
e	0.65 BASIC	
L	0.45	0.75
α	0°	8°
aaa	--	0.10

Reference Document: JEDEC Publication 95, MO-153

TABLE 10. ORDERING INFORMATION

Part/Order Number	Marking	Package	Shipping Packaging	Temperature
ICS843031AG-01	31A01	8 Lead TSSOP	tube	0°C to 70°C
ICS843031AG-01T	31A01	8 Lead TSSOP	2500 tape & reel	0°C to 70°C
ICS843031AG-01LF	1A01L	8 Lead "Lead-Free" TSSOP	tube	0°C to 70°C
ICS843031AG-01LFT	1A01L	8 Lead "Lead-Free" TSSOP	2500 tape & reel	0°C to 70°C

NOTE: Parts that are ordered with an "LF" suffix to the part number are the Pb-Free configuraiton and are RoHS compliant.

While the information presented herein has been checked for both accuracy and reliability, Integrated Device Technology, Incorporated (IDT) assumes no responsibility for either its use or for infringement of any patents or other rights of third parties, which would result from its use. No other circuits, patents, or licenses are implied. This product is intended for use in normal commercial applications. Any other applications such as those requiring extended temperature ranges, high reliability or other extraordinary environmental requirements are not recommended without additional processing by IDT. IDT reserves the right to change any circuitry or specifications without notice. IDT does not authorize or warrant any IDT product for use in life support devices or critical medical instruments.

REVISION HISTORY SHEET				
Rev	**Table**	**Page**	**Description of Change**	**Date**
A	T3	2	Added OE Function Table.	1/23/07
A	T10	14	Order Information Table - Added Lead Free marking	8/1/07

Innovate with IDT and accelerate your future networks. Contact:

www.IDT.com

For Sales
800-345-7015
408-284-8200
Fax: 408-284-2775

For Tech Support
netcom@idt.com
480-763-2056

Corporate Headquarters
Integrated Device Technology, Inc.
6024 Silver Creek Valley Road
San Jose, CA 95138
United States
800 345 7015
+408 284 8200 (outside U.S.)

Asia Pacific and Japan
Integrated Device Technology
Singapore (1997) Pte. Ltd.
Reg. No. 199707558G
435 Orchard Road
#20-03 Wisma Atria
Singapore 238877
+65 6 887 5505

Europe
IDT Europe, Limited
321 Kingston Road
Leatherhead, Surrey
KT22 7TU
England
+44 (0) 1372 363 339
Fax: +44 (0) 1372 378851

www.IDT.com

© 2007 Integrated Device Technology, Inc. All rights reserved. Product specifications subject to change without notice. IDT, the IDT logo, ICS and HiPerClockS are trademarks of Integrated Device Technology, Inc. Accelerated Thinking is a service mark of Integrated Device Technology, Inc. All other brands, product names and marks are or may be trademarks or registered trademarks used to identify products or services of their respective owners.
Printed in USA