HA-5002/883

Monolithic, Wideband, High Slew Rate, High Output Current Buffer

October 26, 2004

Features

- **This Circuit is Processed in Accordance to MIL-STD-883 and is Fully Conformant Under the Provisions of Paragraph 1.2.1.**
- **Voltage Gain (R_L = 1kΩ). . . . . .0.98 (Min)**
  0.995 (Typ)
  (R_L = 100Ω) . . . . . .0.96 (Min)
  0.971 (Typ)
- **High Input Impedance . . . . . .1.5MΩ (Min)**
  3MΩ (Typ)
- **Low Output Impedance . . . . . 5Ω (Max)**
  3Ω (Typ)
- **Very High Slew Rate . . . . . .1000V/µs (Min)**
  1300V/µs (Typ)
- **Wide Small Signal Bandwidth. . . . . .110MHz (Typ)**
- **High Output Current . . . . . 100mA (Min)**
- **High Pulsed Output Current . . . . . 400mA (Max)**
- **Monolithic Dielectric Isolation Construction**
- **Replaces Hybrid LH0002**

Applications

- **Line Driver**
- **Data Acquisition**
- **110MHz Buffer**
- **High Power Current Booster**
- **High Power Current Source**
- **Sample and Holds**
- **Radar Cable Driver**
- **Video Products**

Description

The HA-5002/883 is a monolithic, wideband, high slew rate, high output current, buffer amplifier.

Utilizing the advantages of the Harris Dielectric Isolation technologies, the HA-5002/883 current buffer offers 1300V/µs slew rate typically and 1000V/µs minimum with 110MHz of bandwidth. The ±100mA minimum output current capability is enhanced by a 3Ω output impedance.

The monolithic HA-5002/883 will replace the hybrid LH0002 with corresponding performance increases. These characteristics range from the 3MΩ (typ) input impedance to the increased output voltage swing. Monolithic design technologies have allowed a more precise buffer to be developed with more than an order of magnitude smaller gain error. The voltage gain is 0.98 guaranteed minimum with a 1kΩ load and 0.96 minimum with a 100Ω load.

The HA-5002/883 will provide many present hybrid users with a higher degree of reliability and at the same time increase overall circuit performance.

Ordering Information

PART NUMBER	TEMPERATURE RANGE	PACKAGE
HA4-5002/883	-55°C to +125°C	20 Lead Ceramic LCC

Pinout

HA-5002/883 (CLCC)
TOP VIEW

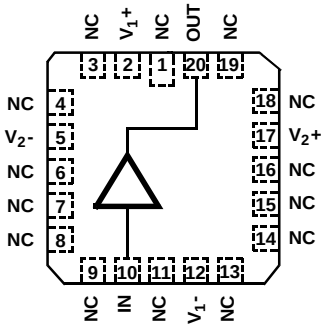

Spec Number **511017-883**
FN3705.2

Absolute Maximum Ratings

Voltage Between V+ and V- Terminals 44V
Input Voltage. . . . . Equal to Supplies
Peak Output Current (50ms On, 1s Off). . . . . .±400mA
Junction Temperature (T_J) . . . . . +175°C
Storage Temperature Range . . . . . -65°C to +150°C
ESD Rating. . . . . <4000V
Lead Temperature (Soldering 10s). . . . . +300°C

Thermal Information

Thermal Resistance	θ_{JA}	θ_{JC}
Ceramic LCC Package	80°C/W	30°C/W

Package Power Dissipation Limit at +75°C for $T_J \leq$ +175°C
Ceramic LCC Package 1.54W
Package Power Dissipation Derating Factor Above +75°C
Ceramic LCC Package . . . . . 15.4mW/°C

CAUTION: Stresses above those listed in "Absolute Maximum Ratings" may cause permanent damage to the device. This is a stress only rating and operation of the device at these or any other conditions above those indicated in the operational sections of this specification is not implied.

NOTEΣ:

1. θ_{JA} is measured with the component mounted on a low effective thermal conductivity test board in free air. See Tech Brief TB379 for details.

Operating Conditions

Operating Temperature Range. . . . . -55°C to +125°C $R_L \geq 100\Omega$
Operating Supply Voltage . . . . . ±12V to ±15V

TABLE 1. DC ELECTRICAL PERFORMANCE CHARACTERISTICS

Device Tested at: V_{SUPPLY} = ±12V and ±15V, R_{SOURCE} = 50Ω, $C_{LOAD} \leq$ 10pF, V_{IN} = 0V, Unless Otherwise Specified.

PARAMETERS	SYMBOL	CONDITIONS	GROUP A SUBGROUPS	TEMPERATURE	LIMITS MIN	LIMITS MAX	UNITS
Input Offset Voltage	V_{IO1}	V_{SUP} = ±15V	1	+25°C	-20	20	mV
			2, 3	+125°C, -55°C	-30	30	mV
	V_{IO2}	V_{SUP} = ±12V	1	+25°C	-20	20	mV
			2, 3	+125°C, -55°C	-30	30	mV
Input Bias Current	I_{B1}	V_{SUP} = ±15V, R_S = 1kΩ	1	+25°C	-7	7	µA
			2, 3	+125°C, -55°C	-10	10	µA
	I_{B2}	V_{SUP} = ±12V, R_S = 1kΩ	1	+25°C	-7	7	µA
			2, 3	+125°C, -55°C	-10	10	µA
Voltage Gain 1	$+AV_1$	V_{SUP} = ±12V, R_L = 1kΩ, V_{IN} = 10V	1	+25°C	0.98	-	V/V
			2, 3	+125°C, -55°C	0.98	-	V/V
	$-AV_1$	V_{SUP} = ±12V, R_L = 1kΩ, V_{IN} = -10V	1	+25°C	0.98	-	V/V
			2, 3	+125°C, -55°C	0.98	-	V/V
Voltage Gain 2	$+AV_2$	V_{SUP} = ±12V, R_L = 100Ω, V_{IN} = 10V	1	+25°C	0.96	-	V/V
	$-AV_2$	V_{SUP} = ±12V, R_L = 100Ω, V_{IN} = -10V	1	+25°C	0.96	-	V/V
Voltage Gain 3	$+AV_3$	V_{SUP} = ±15V, R_L = 100Ω, V_{IN} = 10V	1	+25°C	0.96	-	V/V
	$-AV_3$	V_{SUP} = ±15V, R_L = 100Ω, V_{IN} = -10V	1	+25°C	0.96	-	V/V
Voltage Gain 4	$+AV_4$	V_{SUP} = ±15V, R_L = 1kΩ, V_{IN} = +10V	1	+25°C	0.99	-	V/V
			2, 3	+125°C, -55°C	0.99	-	V/V
	$-AV_4$	V_{SUP} = ±15V, R_L = 1kΩ, V_{IN} = -10V	1	+25°C	0.99	-	V/V
			2, 3	+125°C, -55°C	0.99	-	V/V

TABLE 1. DC ELECTRICAL PERFORMANCE CHARACTERISTICS (Continued)

Device Tested at: V_{SUPPLY} = ±12V and ±15V, R_{SOURCE} = 50Ω, C_{LOAD} ≤ 10pF, V_{IN} = 0V, Unless Otherwise Specified.

PARAMETERS	SYMBOL	CONDITIONS	GROUP A SUBGROUPS	TEMPERATURE	LIMITS MIN	LIMITS MAX	UNITS
Output Voltage Swing	$+V_{OUT1}$	V_{SUP} = ±15V, R_L = 100Ω, V_{IN} = +15V	1	+25°C	10	-	V
			2, 3	+125°C, -55°C	10	-	V
	$-V_{OUT1}$	V_{SUP} = ±15V, R_L = 100Ω, V_{IN} = -15V	1	+25°C	-	-10	V
			2, 3	+125°C, -55°C	-	-10	V
	$+V_{OUT2}$	V_{SUP} = ±15V, R_L = 1kΩ, V_{IN} = +15V	1	+25°C	10	-	V
			2, 3	+125°C, -55°C	10	-	V
	$-V_{OUT2}$	V_{SUP} = ±15V, R_L = 1kΩ, V_{IN} = -15V	1	+25°C	-	-10	V
			2, 3	+125°C, -55°C	-	-10	V
	$+V_{OUT3}$	V_{SUP} = ±12V, R_L = 1kΩ, V_{IN} = +12V	1	+25°C	10	-	V
			2, 3	+125°C, -55°C	10	-	V
	$-V_{OUT3}$	V_{SUP} = ±12V, R_L = 1kΩ, V_{IN} = -12V	1	+25°C	-	-10	V
			2, 3	+125°C, -55°C	-	-10	V
Output Current	$+I_{OUT1}$	V_{SUP} = ±15V, V_{OUT} = +10V	1	+25°C	100	-	mA
			2, 3	+125°C, -55°C	100	-	mA
	$-I_{OUT1}$	V_{SUP} = ±15V, V_{OUT} = -10V	1	+25°C	-	-100	mA
			2, 3	+125°C, -55°C	-	-100	mA
	$+I_{OUT2}$	V_{SUP} = ±12V, V_{OUT} = +10V	1	+25°C	100	-	mA
			2, 3	+125°C, -55°C	100	-	mA
	$-I_{OUT2}$	V_{SUP} = ±12V, V_{OUT} = -10V	1	+25°C	-	-100	mA
			2, 3	+125°C, -55°C	-	-100	mA
Power Supply Rejection Ratio	$+PSRR_1$	ΔV_{SUP} = ±5V, V+ = +20V, V- = -15V, V+ = +10V, V- = -15V	1	+25°C	54	-	dB
			2, 3	+125°C, -55°C	54	-	dB
	$-PSRR_1$	ΔV_{SUP} = ±5V, V+ = +15V, V- = -20V, V+ = +15V, V- = -10V	1	+25°C	54	-	dB
			2, 3	+125°C, -55°C	54	-	dB
	$+PSRR_2$	ΔV_{SUP} = ±5V, V+ = +17V, V- = -12V, V+ = +7V, V- = -12V	1	+25°C	54	-	dB
			2, 3	+125°C, -55°C	54	-	dB
	$-PSRR_2$	ΔV_{SUP} = ±5V, V+ = +12V, V- = -17V, V+ = +12V, V- = -7V	1	+25°C	54	-	dB
			2, 3	+125°C, -55°C	54	-	dB

TABLE 1. DC ELECTRICAL PERFORMANCE CHARACTERISTICS (Continued)

Device Tested at: V_{SUPPLY} = ±12V and ±15V, R_{SOURCE} = 50Ω, C_{LOAD} ≤ 10pF, V_{IN} = 0V, Unless Otherwise Specified.

PARAMETERS	SYMBOL	CONDITIONS	GROUP A SUBGROUPS	TEMPERATURE	LIMITS MIN	LIMITS MAX	UNITS
Power Supply Current	$+ICC_1$	V_{SUP} = ±15V, V_{OUT} = 0V	1	+25°C	-	10	mA
			2, 3	+125°C, -55°C	-	10	mA
	$-ICC_1$	V_{SUP} = ±15V, V_{OUT} = 0V	1	+25°C	-10	-	mA
			2, 3	+125°C, -55°C	-10	-	mA
	$+ICC_2$	V_{SUP} = ±12V, V_{OUT} = 0V	1	+25°C	-	10	mA
			2, 3	+125°C, -55°C	-	10	mA
	$-ICC_2$	V_{SUP} = ±12V, V_{OUT} = 0V	1	+25°C	-10	-	mA
			2, 3	+125°C, -55°C	-10	-	mA

TABLE 2. AC ELECTRICAL PERFORMANCE CHARACTERISTICS

Table 2 Intentionally Left Blank. See AC Specifications in Table 3

TABLE 3. ELECTRICAL PERFORMANCE CHARACTERISTICS

Device Characterized at: V_{SUPPLY} = ±15V or ±12V, R_{LOAD} = 1kΩ, C_{LOAD} ≤ 10pF, Unless Otherwise Specified.

PARAMETERS	SYMBOL	CONDITIONS	NOTES	TEMPERATURE	LIMITS MIN	LIMITS MAX	UNITS
Input Resistance	R_{IN1}	V_{SUP} = ±15V	1	+25°C	1.5	-	MΩ
	R_{IN2}	V_{SUP} = ±12V	1	+25°C	1.5	-	MΩ
Slew Rate	$+SR_1$	V_{SUP} = ±15V, V_{OUT} = -5V to +5V	1	+25°C	1000	-	V/µs
				+125°C, -55°C	1000	-	V/µs
	$-SR_1$	V_{SUP} = ±15V, V_{OUT} = +5V to -5V	1	+25°C	1000	-	V/µs
				+125°C, -55°C	1000	-	V/µs
	$+SR_2$	V_{SUP} = ±12V, V_{OUT} = -5V to +5V	1	+25°C	1000	-	V/µs
				+125°C, -55°C	1000	-	V/µs
	$-SR_2$	V_{SUP} = ±12V, V_{OUT} = +5V to -5V	1	+25°C	1000	-	V/µs
				+125°C, -55°C	1000	-	V/µs
Rise and Fall Time	T_R	V_{SUP} = ±15V or ±12V, V_{OUT} = 0 to +500mV	1, 2	+25°C	-	10	ns
			1, 2	+125°C, -55°C	-	10	ns
	T_F	V_{SUP} = ±15V or ±12V, V_{OUT} = 0 to -500mV	1, 2	+25°C	-	10	ns
			1, 2	+125°C, -55°C	-	10	ns

TABLE 3. ELECTRICAL PERFORMANCE CHARACTERISTICS (Continued)

Device Characterized at: V_{SUPPLY} = ±15V or ±12V, R_{LOAD} = 1kΩ, C_{LOAD} ≤ 10pF, Unless Otherwise Specified.

PARAMETERS	SYMBOL	CONDITIONS	NOTES	TEMPERATURE	LIMITS MIN	LIMITS MAX	UNITS
Overshoot	+OS	V_{SUP} = ±12V or ±15V, V_{OUT} = 0 to +500mV	1	+25°C	-	30	%
				+125°C, -55°C	-	30	%
	-OS	V_{SUP} = ±12V or ±15V, V_{OUT} = 0 to -500mV	1	+25°C	-	30	%
				+125°C, -55°C	-	30	%
Quiescent Power Consumption	PC_1	V_{SUP} = ±15V, V_{IN} = 0V, I_{OUT} = 0mA	1, 3	+25°C	-	300	mW
				+125°C, -55°C	-	300	mW
	PC_2	V_{SUP} = ±12V, V_{IN} = 0V, I_{OUT} = 0mA	1, 3	+25°C	-	240	mW
				+125°C, -55°C	-	240	mW
Output Resistance	R_{OUT1}	V_{SUP} = ±12V	1	+25°C	-	5	Ω
	R_{OUT2}	V_{SUP} = ±12V	1	+25°C	-	5	Ω

NOTES:

1. Parameters listed in Table 3 are controlled via design or process parameters and are not directly tested at final production. These parameters are lab characterized upon initial design release, or upon design changes. These parameters are guaranteed by characterization based upon data from multiple production runs which reflect lot to lot and within lot variation.
2. Measured between 10% and 90% points.
3. Quiescent Power Consumption based upon Quiescent Supply Current test maximum. (No load on outputs.)

TABLE 4. ELECTRICAL TEST REQUIREMENTS

MIL-STD-883 TEST REQUIREMENTS	SUBGROUPS (SEE TABLE 1)
Interim Electrical Parameters (Pre Burn-In)	1
Final Electrical Test Parameters	1 (Note 1), 2, 3
Group A Test Requirements	1, 2, 3
Groups C and D Endpoints	1

NOTE:

1. PDA applies to Subgroup 1 only.

Die Characteristics

DIE DIMENSIONS:
81 x 80 x 19 mils ± 1 mils
2050 x 2030 x 483µm ± 25.4µm

METALLIZATION:
Type: Al, 1% Cu
Thickness: 20kÅ ± 2kÅ

GLASSIVATION:
Type: Nitride
Thickness: 7kÅ ± 0.7kÅ

WORST CASE CURRENT DENSITY:
0.7 x 10^5 A/cm^2 at 3.6mA

SUBSTRATE POTENTIAL (Powered Up): V1-

TRANSISTOR COUNT: 27

PROCESS: Bipolar Dielectric Isolation

Metallization Mask Layout

HA-5002/883