## CA3021, CA3022, CA3023

# Low-Power Wideband Amplifiers

12-Lead TO-5

H-1463

**Features:**

- *Lower DC Power Drain:*

  $P_T$ { *CA3021 = 4 mW typ.*, *CA3022 = 12.5 mW typ.*, *CA3023 = 35 mW tp.* } *at Vcc = 6 V*

- *Excellent frequency response:*

  -3dB BW { *CA3021 = 2.4 MHz typ.*, *CA3022 = 7.5 MHz typ.*, *CA3023 = 16 MHz typ.* }

- *High Voltage Gain:*

  A { *CA3021 = 56 dB typ. at 0.5 MHz*, *CA3022 = 57 dB typ. at 2.5 MHz*, *CA3023 = 53 dB typ. at 5 MHz* }

- *Wide AGC Range: 33 dB typ.*
- *Only one power supply (4.5 to 12 V) required*
- *Hermetically sealed 12-lead TO-5-style package*
- *Operation from −55° C to +125° C*

**Applications:**

- *Gain-controlled linear amplifiers*
- *AM/FM IF amplifiers*
- *Video amplifiers*
- *Limiters*

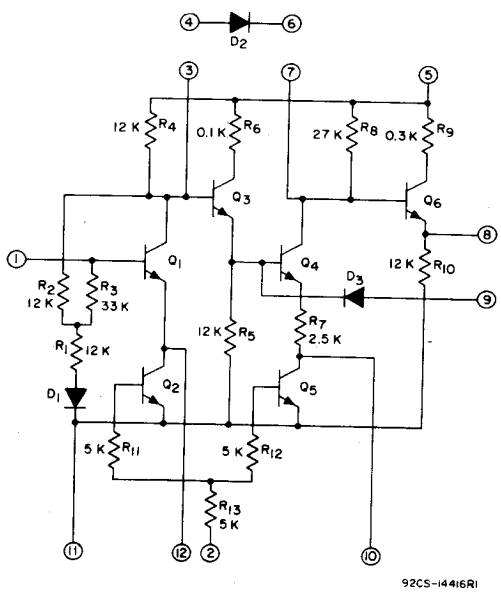


*Fig. 1 – Schematic diagram for CA3021, CA3022, and CA3023.*



This Material Copyrighted By Its Respective Manufacturer

## CA3021, CA3022, CA3023

**ABSOLUTE-MAXIMUM RATINGS:**

| | | |
|---|---|---|
| OPERATING-TEMPERATURE RANGE | -55°C to +125°C | |
| STORAGE-TEMPERATURE RANGE | -65°C to +150°C | |
| LEAD TEMPERATURE (During Soldering): At distance 1/16 ± 1/32 inch (1.59 ± 0.79mm) from case for 10 seconds max. | +265°C | |
| DEVICE DISSIPATION, $P_T$ | 120 max. | mW |
| INPUT-SIGNAL VOLTAGE | -3, +3 max. | V |
| DC VOLTAGES AND CURRENTS | See Table Below | |

| | VOLTAGE OR CURRENT LIMITS | | CIRCUIT CONDITIONS | |
|---|---|---|---|---|
| TERMINAL | NEGATIVE | POSITIVE | TERMINAL | CONDITIONS |
| 1 | -3V | +3V | 1 | Connected to Voltage Source through 100Ω Resistor |
| | | | 5 | +12V |
| | | | 10, 11, 12 | Ground |
| 2 | -3V | +12V | 5 | +12V |
| | | | 10, 11, 12 | Ground |
| 3 | 0V | +12V | 5 | +12V |
| | | | 10, 11, 12 | Ground |
| 4 | -12V | +12V | 6, 11 | Ground |
| | 10 max. mA | | | |
| 5 | 0V | +18V | 10, 11, 12 | Ground |
| 6 | -12V | +12V | 5, 11 | Ground |
| | 10 max. mA | | | |

| | VOLTAGE OR CURRENT LIMITS | | CIRCUIT CONDITIONS | |
|---|---|---|---|---|
| TERMINAL | NEGATIVE | POSITIVE | TERMINAL | CONDITIONS |
| 7 | 0V | +12V | 5 | +12V |
| | | | 10, 11, 12 | Ground |
| 8 | 20 max. mA | | 5 | +12V |
| | | | 10, 11, 12 | Ground |
| 9 | -0.5V | +3V | 5 | +12V |
| | | | 10, 11, 12 | Ground |
| 10 | 0V | +4V | 2,5 | +12V |
| | | | 11 | Ground |
| 11 | -6V | +12V | 2 | Ground |
| | | | 5 | +12V |
| 12 | 0V | +4V | 2,5 | +12V |
| | | | 11 | Ground |



This Material Copyrighted By Its Respective Manufacturer

**ELECTRICAL CHARACTERISTICS,** at $T_A = 25^\circ C$, $V_{CC} = +6V$, unless otherwise specified

| CHARACTERISTIC | SYMBOL | TEST CONDITIONS | | | LIMITS | | | | | | | | | | |
|---|---|---|---|---|---|---|---|---|---|---|---|---|---|---|---|
| | | TEST SETUP AND PROCEDURE | FEEDBACK RESISTANCE ($R_\beta$) BETWEEN TERMINALS 3 AND 7 | FREQUENCY f | CA3021 (TA5219) | | | CA3022 (TA5236) | | | CA3023 (TA5218) | | | UNITS | TYPICAL CHARACTERISTIC CURVE |
| | | Fig. | Ω | MHz | Min. | Typ. | Max. | Min. | Typ. | Max. | Min. | Typ. | Max. | Units | Fig. |
| Device Dissipation | $P_T$ | 2 | ∞ | - | 1 | 4 | 8 | – | – | – | – | – | – | mW | 3a,d |
| | | | ∞ | – | – | – | - | 5 | 12.5 | 24 | – | – | – | mW | 3b,d |
| | | | ∞ | – | – | – | – | – | – | – | 24 | 35 | 48 | mW | 3c,d |
| Quiescent Output Voltage | $V_O$ | 2 | 39k | – | – | 2.2 | – | – | – | – | – | – | – | V | – |
| | | | 10k | – | – | – | – | – | 1.9 | – | – | – | – | V | |
| | | | 4.7k | – | – | – | – | – | – | – | – | 1.3 | – | V | |
| AGC Source Current | $I_{AGC}$ | 4 | $V_{AGC} = +6V$ | | – | 0.8 | – | – | 0.8 | – | – | 0.8 | – | mA | – |
| Voltage Gain | A | 5 | 560k | 0.5 | 50 | 56 | – | – | – | – | – | – | – | dB | 6a |
| | | | 39k | 0.8 | 40 | 46 | – | – | – | – | – | – | – | dB | 6a,d |
| | | | 39k | 2.5 | – | – | – | 50 | 57 | – | – | – | – | dB | 6b |
| | | | 10k | 3 | – | – | – | 40 | 44 | – | – | – | – | dB | 6b,d |
| | | | 18k | 5 | – | – | – | – | – | – | 50 | 53 | – | dB | 6c |
| | | | 4.7k | 10 | – | – | – | – | – | – | 40 | 44 | – | dB | 6c,d |
| Bandwidth at -3 dB Point | BW | 5 | 39k | – | 0.8 | 2.4 | – | – | – | – | – | – | – | MHz | 6a |
| | | | 10k | – | – | – | – | 3 | 7.5 | – | – | – | – | MHz | 6b |
| | | | 4.7k | – | – | – | – | – | – | – | 10 | 16 | – | MHz | 6c |
| Input-Impedance Components: Input Resistance | $R_{IN}$ | 7 | 39k | 1 | – | 4000 | – | – | – | – | – | – | – | Ω | – |
| | | | 10k | 5 | – | – | – | – | 1300 | – | – | – | – | Ω | |
| | | | 4.7k | 10 | – | – | – | – | – | – | – | 300 | – | Ω | |
| Input-Impedance Components: Input Capacitance | $C_{IN}$ | 7 | 39k | 1 | – | 11 | – | – | – | – | – | – | – | pF | – |
| | | | 10k | 5 | – | – | – | – | 18 | – | – | – | – | pF | |
| | | | 4.7k | 10 | – | – | – | – | – | – | – | 13 | – | pF | |
| Output Resistance | $R_{OUT}$ | 8 | 39k | 1 | – | 300 | – | – | – | – | – | – | – | Ω | – |
| | | | 10k | 5 | – | – | – | – | 120 | – | – | – | – | Ω | |
| | | | 4.7k | 10 | – | – | – | – | – | – | – | 100 | – | Ω | |
| Noise Figure | NF | 9 | 39k | 1 | – | 4.2 | 8.5 | – | – | – | – | – | – | dB | – |
| | | | 10k | 1 | – | – | – | – | 4.4 | 8.5 | – | – | – | dB | |
| | | | 4.7k | 1 | – | – | – | – | – | – | – | 6.5 | 8.5 | dB | |
| AGC Range | AGC | 10 | – | 1 | – | 33 | – | – | – | – | – | – | – | dB | – |
| | | | – | 5 | – | – | – | – | 33 | – | – | – | – | dB | |
| | | | – | 10 | – | – | – | – | – | – | – | 33 | – | dB | |
| Maximum Output Voltage (RMS Value) | $v_{out}$ | 5 | 39k | 1 | – | 0.6 | – | – | – | – | – | – | – | V(rms) | – |
| | | | 10k | 5 | – | – | – | – | 0.7 | – | – | – | – | V(rms) | |
| | | | 4.7k | 10 | – | – | – | – | – | – | – | 0.5 | – | V(rms) | |



This Material Copyrighted By Its Respective Manufacturer

## CA3021, CA3022, CA3023

TEST SETUP FOR MEASUREMENT OF DEVICE DISSIPATION AND QUIESCENT OUTPUT VOLTAGE

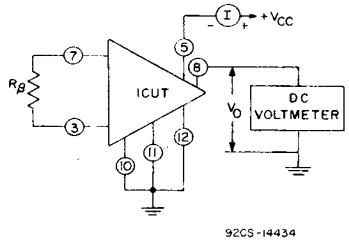


$P_T = V_{CC}(I)$

Fig. 2

DEVICE DISSIPATION VS DC SUPPLY VOLTAGE FOR CA3022

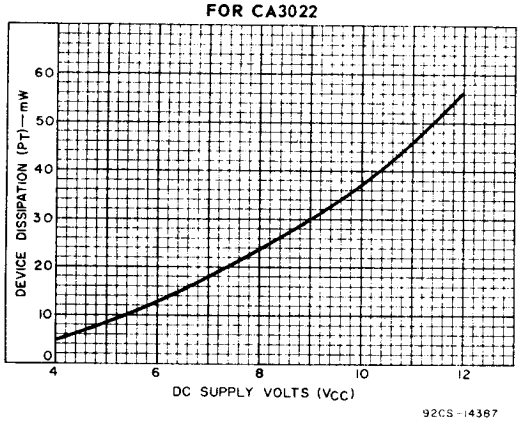


Fig. 3(b)

DEVICE DISSIPATION VS TEMPERATURE FOR CA3021, CA3022, AND CA3023

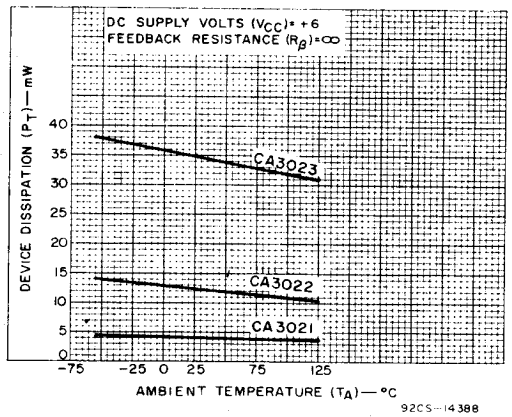


Fig. 3(d)

DEVICE DISSIPATION VS DC SUPPLY VOLTAGE FOR CA3021

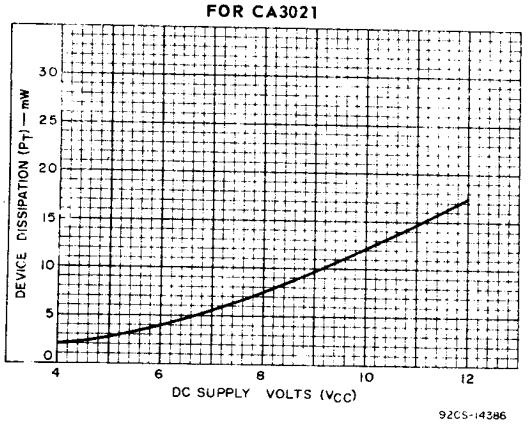


Fig. 3(a)

DEVICE DISSIPATION VS DC SUPPLY VOLTAGE FOR CA3023

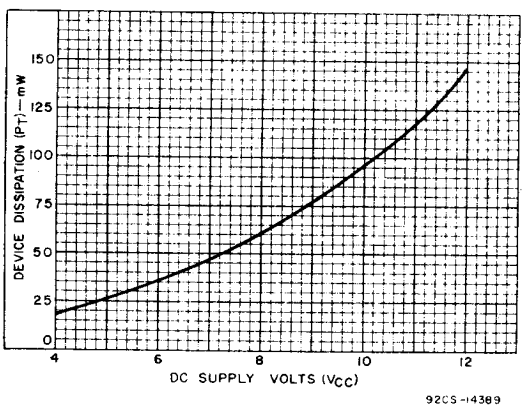


Fig. 3(c)

TEST SETUP FOR MEASUREMENT OF AGC SOURCE CURRENT

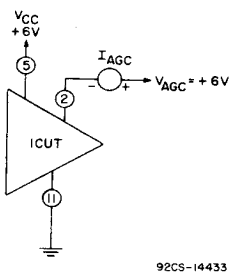


$I_{AGC}$ IS THE CURRENT FLOWING INTO TERMINAL 2.

Fig. 4



This Material Copyrighted By Its Respective Manufacturer

### TEST SETUP FOR MEASUREMENTS OF VOLTAGE-GAIN, -3dB BANDWIDTH, AND MAXIMUM OUTPUT VOLTAGE

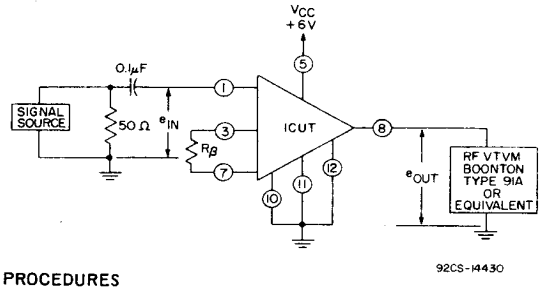


PROCEDURES

Voltage Gain:

(a) Set $e_{in}$ = 0.5 mV at frequency specified, read $e_{out}$ Voltage Gain

(A) = 20 $\text{Log}_{10} \frac{e_{out}}{e_{in}}$

Bandwidth:

(a) Set $e_{out}$ to a convenient reference voltage at f = 100 kHz and record corresponding value of $e_{in}$.

(b) Increase the frequency, keeping $e_{in}$ constant until $e_{out}$ drops 3-dB. Record Bandwidth.

Fig. 5

### VOLTAGE GAIN VS FREQUENCY FOR CA3021

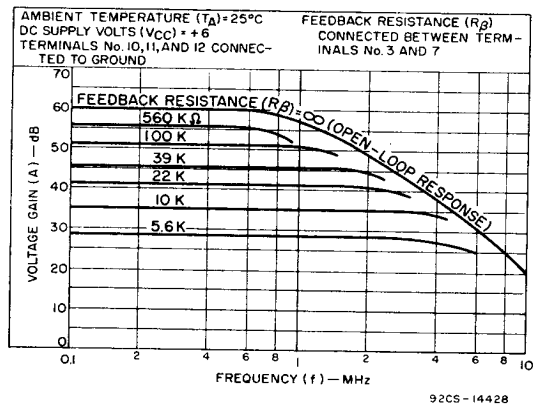


Fig. 6(a)

### VOLTAGE GAIN VS FREQUENCY FOR CA3022

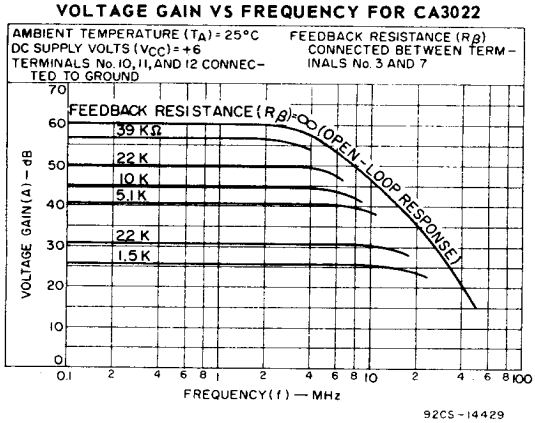


Fig. 6(b)

### VOLTAGE GAIN VS FREQUENCY FOR CA3023

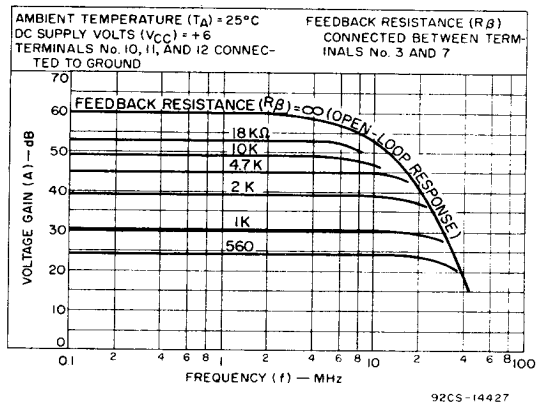


Fig. 6(c)

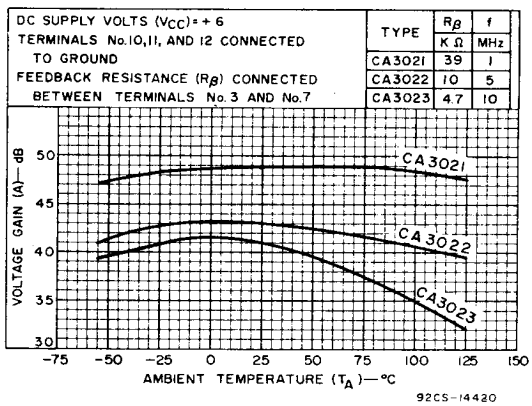


Fig. 6(d)

### VOLTAGE GAIN VS TEMPERATURE FOR CA3021, CA3022, AND CA3023



This Material Copyrighted By Its Respective Manufacturer

# CA3021, CA3022, CA3023

## TEST SETUP FOR MEASUREMENT OF INPUT-IMPEDANCE COMPONENTS

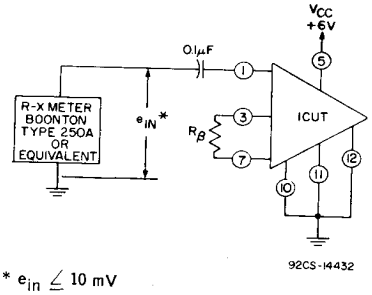


* $e_{in} \leq 10$ mV

Fig.7

## TEST SETUP FOR MEASUREMENT OF OUTPUT RESISTANCE

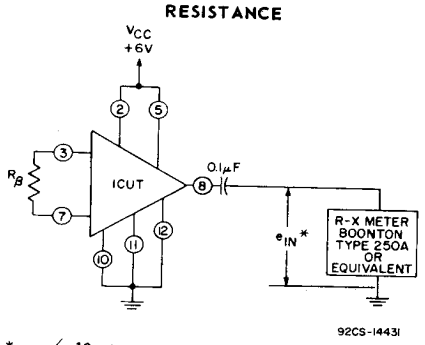


* $e_{in} \leq 10$ mV

Fig.8

## TEST SETUP FOR MEASUREMENT OF NOISE FIGURE

| ICUT | Rβ KΩ |
|---|---|
| CA3021 | 39 |
| CA3022 | 10 |
| CA3023 | 4.7 |

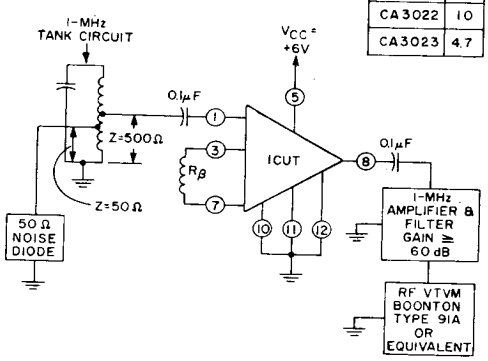


CA3021 - $R_\beta$ = 39 kΩ
CA3022 - $R_\beta$ = 10 kΩ
CA3023 - $R_\beta$ = 4.7 kΩ

Fig.9

## TEST SETUP FOR MEASUREMENT OF AGC RANGE

| TYPE | f (MHz) | L | R (KΩ) |
|---|---|---|---|
| CA3021 | 1 | 2.5mH | 10 |
| CA3022 | 5 | 260μH | 4.7 |
| CA3023 | 10 | 62μH | 4.7 |

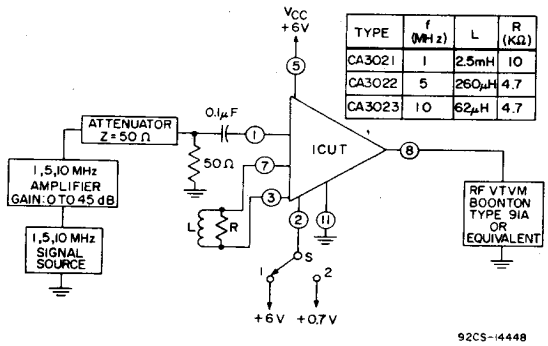


$$\text{AGC RANGE} = 20 \log_{10} \frac{\text{A WITH S IN POSITION 1}}{\text{A WITH S IN POSITION 2}}$$

(A = VOLTAGE GAIN)

| | f MHz |
|---|---|
| CA3021 | 1 |
| CA3022 | 5 |
| CA3023 | 10 |

Fig. 10



This Material Copyrighted By Its Respective Manufacturer