CA3048

Four Independent AC Amplifiers

For Low-Noise and General AC Applications
In Industrial Service

FEATURES

- Four AC amplifiers on a common substrate
- Independently accessible inputs and outputs
- Operates from single-ended supply

EACH AMPLIFIER

- Noise figure at 1 kHz ..... 2 dB typ.
- High voltage gain ..... 53 dB min.
- High input resistance ..... 90 kΩ typ.
- Undistorted output voltage 2 V rms min.
- Output Impedance ..... 1 kΩ typ.
- Open-loop bandwidth ..... 300 kHz typ.

The RCA CA3048 is a silicon monolithic integrated circuit consisting of four independent identical AC amplifiers which can operate from a single-ended power supply.

The amplifiers include internal DC bias and feedback to provide temperature-stabilized operation. They may be used in a wide variety of AC applications in which operational amplifiers have previously been used.

Each high gain amplifier has a high impedance non-inverting input, and a lower impedance inverting input for the application of feedback. Two power-supply terminals and two ground terminals are provided to reduce internal and external coupling between amplifiers.

The CA3048 is supplied in a 16-lead dual-in-line plastic package.

APPLICATIONS

- Multi-channel or cascade operation
- Low-level preamplifiers
- Equalizers
- Linear signal mixers
- Tone generators
- Multivibrators
- AC integrators

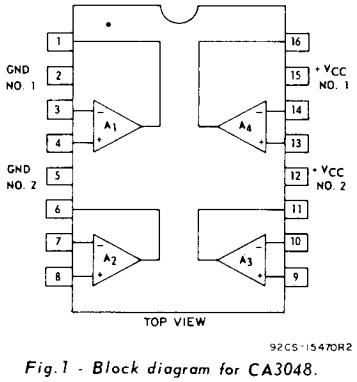

Fig. 1 - Block diagram for CA3048.

File Number **377**

CA3048

ABSOLUTE-MAXIMUM RATINGS at T_A = 25°C:

DISSIPATION:
- At T_A = 55°C . . . . . 750 mW
- Above T_A = 55°C . . . . . Derate linearly at 7.7 mW/°C

TEMPERATURE RANGE:
- Operating . . . . . -40°C to +85°C
- Storage . . . . . -65°C to +150°C

POWER SUPPLY VOLTAGE . . . . . +16 V

AC INPUT VOLTAGE . . . . . 0.5 V rms

MAXIMUM VOLTAGE RATINGS

The following chart gives the range of voltages which can be applied to the terminals listed vertically with respect to the terminals listed horizontally. For example, the voltage range between vertical terminal 2 and horizontal terminal 4 is +2 to -3.6 volts.

TERMINAL No.	1	2	3	4	5	6	7	8	9	10	11	12	13	14	15	16
1		+16 0	*	*	*	*	*	*	*	*	*	*	*	*	0 -16	*
2			*	+2 -3.6	0	*	*	+2 -3.6	-3.6	*	*	+16 0	+2 -3.6	*	+16 0	0 -16
3				+5 -5	*	*	*	*	*	*	*	*	*	*	*	*
4					+3.6 -2	*	*	*	*	*	*	*	*	*	*	*
5						0 -16	*	+2 -3.6	+2 -3.6	*	0 -16	+16 0	+2 -3.6	*	+16 0	*
6							*	*	*	*	*	*	0 -16	*	*	*
7								+5 -5	*	*	*	*	*	*	*	*
8									*	*	*	*	*	*	*	*
9										+5 -5	*	*	*	*	*	*
10											*	*	*	*	*	*
11												*	*	*	*	*
12													0 -16	*	*	*
13														+5 -5	*	*
14															*	*
15																+16 0
16																

* Voltages are not normally applied between these terminals. Voltages appearing between these terminals will be safe if the specified limits between all other terminals are not exceeded.

ELECTRICAL CHARACTERISTICS at T_A = 25°C

CHARACTERISTICS	SYMBOLS	TEST CONDITIONS		TEST CIRCUIT FIG.	LIMITS CA3048 MIN.	TYP.	MAX.	UNITS	TYPICAL CHARACTERISTICS CURVES FIG.
STATIC									
Current drain per amplifier pair	I_{12} or I_{15}	V_{CC} = +12V		3	9.5	13.5	17.5	mA	4,5
DC Voltage at Output Terminals	V1, V6, V11, V16	V_{CC} = +12V		3	6.1	6.9	8.1	V	-
DC Voltage at Feedback Terminals	V3, V7, V10, V14	V_{CC} = +12V		3	1.7	2.0	2.3	V	-
DC Voltage at Input Terminals	V4, V8, V9, V13	V_{CC} = +12V		3	2.2	2.5	2.8	V	-
DYNAMIC (Characteristics given are for each amplifier with no AC feedback)									
Open-Loop Gain	A_{OL}	V_{CC} = +12V E_{IN} = 2mV f = 10kHz		6	53	58	-	dB	7,8
Output Voltage Swing	V_O(rms)	V_{CC} = +12V f = 1kHz THD = 5%		6	2.0	2.4	-	V	-
Open-Loop -3dB Bandwidth	BW	V_{CC} = +12V E_{IN} = 2mV		6	250	300	-	kHz	9
Total Harmonic Distortion	THD	V_{CC} = +12V, f = 1kHz E_{OUT} = 2V rms		6	-	0.65	-	%	10
Input Resistance	R_{IN}	OPEN LOOP Terminals 3, 7, 10, and 14 are bypassed to ground f = 1kHz		-	-	90	-	kΩ	-
Input Capacitance	C_{IN}	f = 1MHz		-	-	9	-	pF	-
Output Resistance	R_{OUT}	Terminals 3, 7, 10 and 14 are bypassed to ground		-	-	1	-	kΩ	-
Output Capacitance	C_{OUT}	f = 1MHz		-	-	18	-	pF	-
Feedback Capacitance (Output to non-inverting Input)	C_{FB}	V_{CC} = +12V f = 1MHz		-	-	<0.1	-	pF	-
Broad-Band Output Noise Voltage	E_N	V_{CC} = +12V R_S = 10kΩ A = 40dB Equivalent Noise BW = 50kHz		11	-	0.3	1	mV	-
Output Noise Voltage "Weighted"	E_N(WT)			12	-	0.5	2.2	mV	-
Noise Figure	NF (R_S = 5kΩ)	f =	10Hz	-	-	10	-	dB	-
			100Hz	-	-	5.8	-	dB	
			1kHz	-	-	2	-	dB	
			10kHz	-	-	1.1	-	dB	
			100kHz	-	-	0.6	-	dB	
Inter-Amplifier Audio Separation "Cross Talk"		V_{CC} = +12V f = 1kHz 0dB = 0.78V		13	-	<-45	-	dB	-
Inter-Amplifier Capacitance (Any amplifier output to any *other* amplifier input)	C	V_{CC} = +12V f = 1MHz		-	-	<0.02	-	pF	-

CA3048

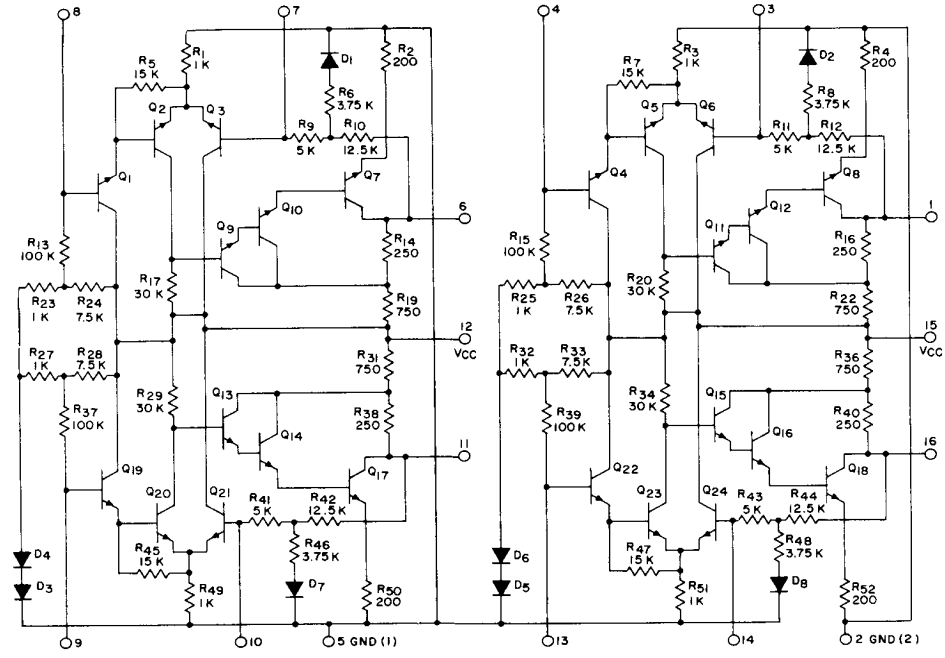

Note: All resistor values are in ohms

Fig.2 - Schematic diagram for CA3048.

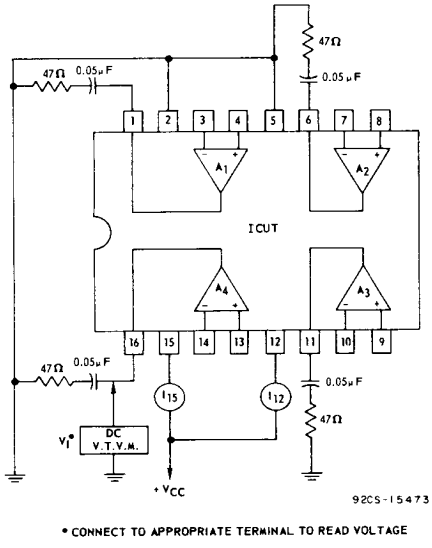

Fig.3 - Test circuit for measurement of collector supply voltage and currents.

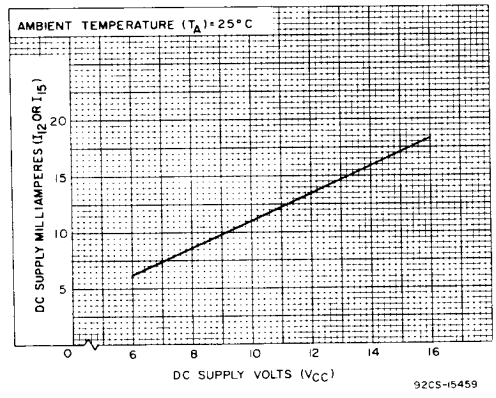

Fig.4 - Typical DC supply current vs supply voltage.

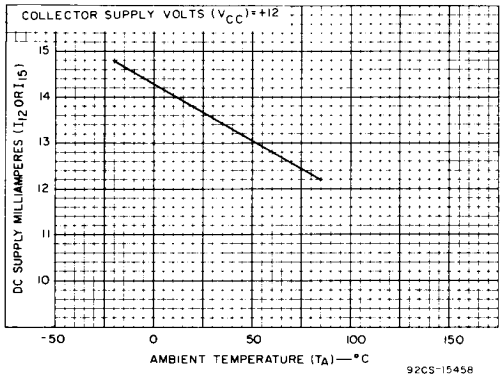

Fig.5 - Typical DC supply current vs ambient temperature.

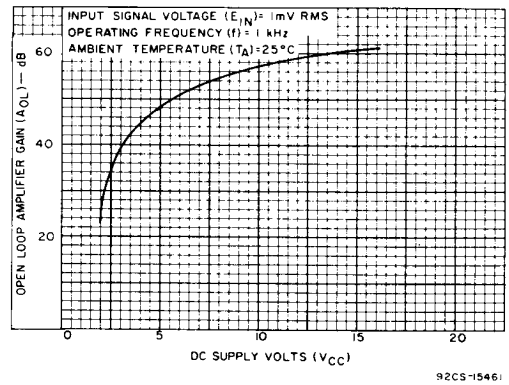

Fig.7 - Typical amplifier gain vs DC supply voltage.

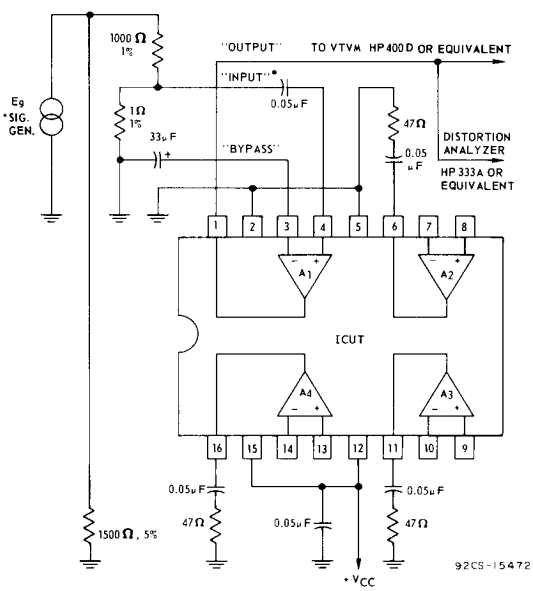

* Sig Gen should be a low distortion type (0.2% THD or less) HP206A or equivalent.

● Adjustment of E_g to 2 volts will make E_S = 2mV.

Test Circuit shows Amplifier #1 under test, to test Amplifiers 2, 3, or 4; Connect terminals as shown in Table.

AMPLIFIER	TERMINALS		
	OUTPUT	INPUT	BYPASS
1	1	4	3
2	6	8	7
3	11	9	10
4	16	13	14

Fig.6 - Test circuit for measurement of distortion, open-loop gain and bandwidth characteristics.

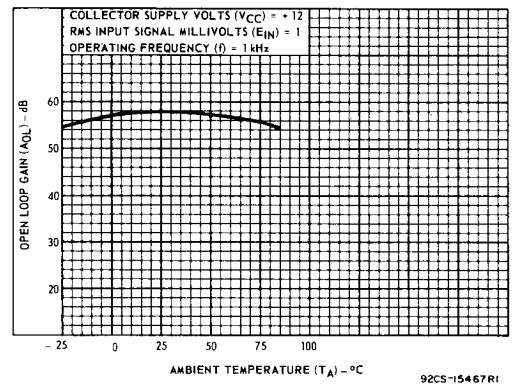

Fig.8 - Typical open-loop gain vs ambient temperature.

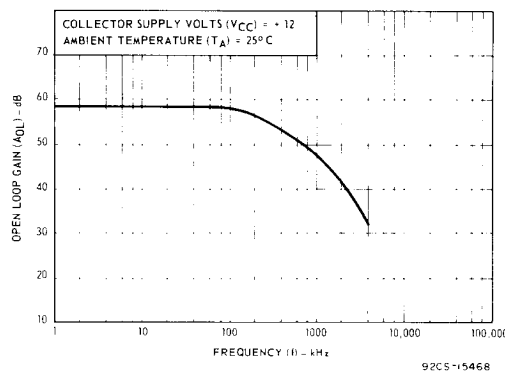

Fig.9 - Typical open-loop gain vs frequency.

CA3048

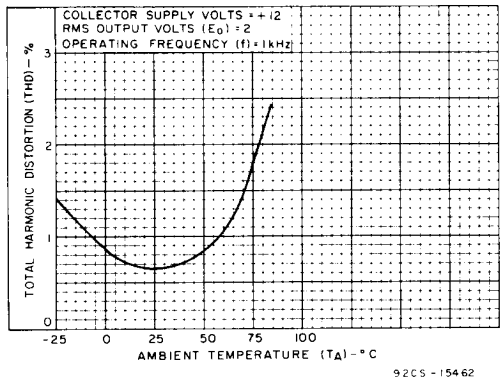

Fig.10 - Typical total harmonic distortion vs ambient temperature.

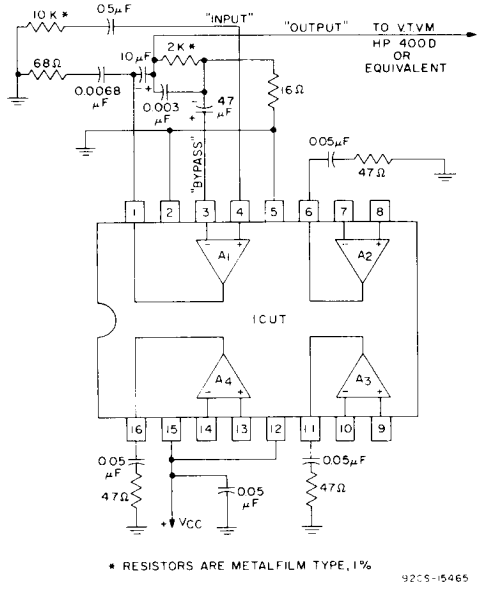

To test Amplifiers 1, 2, 3, or 4, connect terminals as shown in Table.

AMPLIFIER	TERMINALS		
	OUTPUT	INPUT	BYPASS
1	1	4	3
2	6	8	7
3	11	9	10
4	16	13	14

Fig.11 - Test circuit for measurement of broadband noise characteristic.

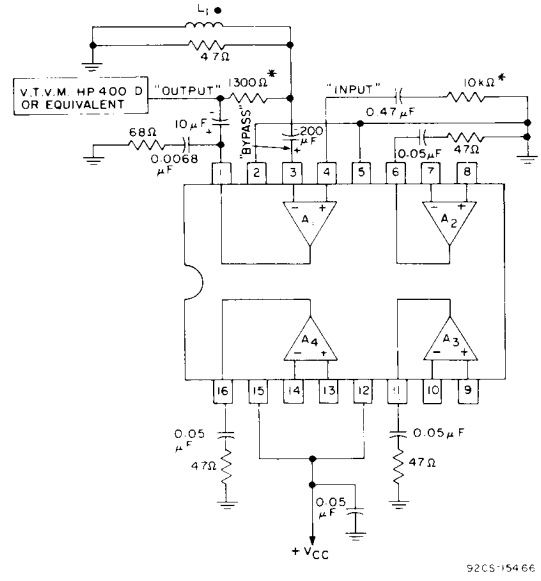

● L_1 - 2.5 millihenry inductor, dc resistance 0.3 ohms or less.

* Resistors metal film type, 1%. To test amplifiers, connect terminals as shown in Table.

AMPLIFIER	TERMINALS		
	OUTPUT	INPUT	BYPASS
1	1	4	3
2	6	8	7
3	11	9	10
4	16	13	14

Fig.12 - Test circuit for measurement of "weighted" output noise voltage characteristic.

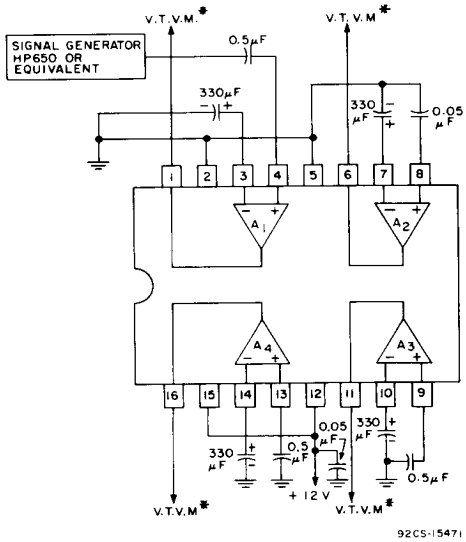

* V.T.V.M. - Hewlett-Packard Model 400D or equivalent.

Procedure:

1. Adjust Signal Generator for 0 dB output at reference terminal.
2. Read voltage at other output terminals (Figure shows terminal #1 used as reference).

Fig.13 - Test circuit for measurement of inter-amplifier audio separation "cross talk" characteristic.

OPERATING CONSIDERATIONS

Economical Gain Control

The CA3048 is designed to permit flexibility in the methods by which amplifier gain can be controlled. Fig.14 shows a curve of the gain of an amplifier when the internal resistive feedback of the device is used in conjunction with an external resistor. Although measured gain of various amplifiers will not be uniform, because of tolerances of internal resistances, this method is very economical and easy to apply.

Stability

The CA3048, as in other devices having high gain-bandwidth product, requires some attention to circuit layout, design, and construction to achieve stability.

Should the CA3048 be left unterminated, socket capacitance alone will provide sufficient feedback to cause high frequency oscillations; therefore, all test circuits in this data bulletin include loading networks that provide stability under all conditions.

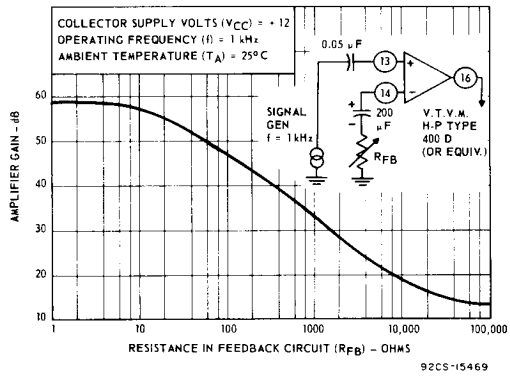

Fig.14 - Typical amplifier gain vs feedback resistance.