CA5420, CA5420A

0.5MHz, Low Supply Voltage, Low Input Current BiMOS Operational Amplifiers

November 1996

Features

- **CA5420A, CA5420 at 5V Supply Voltage with Full Military Temperature Range Guaranteed Specifications**
- **CA5420A, CA5420 Guaranteed to Operate from ±1V to ±10V Supplies**
- **2V Supply at 300μA Supply Current**
- **1pA (Typ) Input Current (Essentially Constant to 85°C)**
- **Rail-to-Rail Output Swing (Drive ±2mA Into 1kΩ Load)**
- **Pin Compatible with 741 Op Amp**

Applications

- **pH Probe Amplifiers**
- **Picoammeters**
- **Electrometer (High Z) Instruments**
- **Portable Equipment**
- **Inaccessible Field Equipment**
- **Battery Dependent Equipment (Medical and Military)**
- **5V Logic Systems**
- **Microprocessor Interface**

Ordering Information

PART NUMBER (BRAND)	TEMP. RANGE (°C)	PACKAGE	PKG. NO.
CA5420AM (5420A)	-55 to 125	8 Ld SOIC	M8.15
CA5420AT	-55 to 125	8 Pin Metal Can	T8.C
CA5420E	-55 to 125	8 Ld PDIP	E8.3
CA5420M (5420)	-55 to 125	8 Ld SOIC	M8.15
CA5420T	-55 to 125	8 Pin Metal Can	T8.C

Description

The CA5420A and CA5420 (see Note) are integrated circuit operational amplifiers that combine PMOS transistors and bipolar transistors on a single monolithic chip. They are designed and guaranteed to operate in microprocessor logic systems that use V+ = 5V, V- = GND, since they can operate down to ±1V supplies. They will also be suitable for 3.3V logic systems.

The CA5420A and CA5420 BiMOS operational amplifiers feature gate-protected PMOS transistors in the input circuit to provide very high input impedance, very low input currents (less than 1pA). The internal bootstrapping network features a unique guardbanding technique for reducing the doubling of leakage current for every 10°C increase in temperature. The CA5420 series operates at total supply voltages from 2V to 20V either single or dual supply. These operational amplifiers are internally phase compensated to achieve stable operation in the unity gain follower configuration. Additionally, they have access terminals for a supplementary external capacitor if additional frequency roll-off is desired. Terminals are also provided for use in applications requiring input offset voltage nulling. The use of PMOS in the input stage results in common-mode input voltage capability down to 0.45V below the negative supply terminal, an important attribute for single supply application. The output stage uses a feedback OTA type amplifier that can swing essentially from rail-to-rail. The output driving current of 1.0mA (Min) is provided by using nonlinear current mirrors.

These devices have guaranteed specifications for 5V operation over the full military temperature range of -55°C to 125°C.

The CA5420 series has the same 8 lead pinout used for the industry standard 741.

NOTE: Formerly Development Type No. TA10841.

Pinouts

CA5420 (PDIP, SOIC)
TOP VIEW

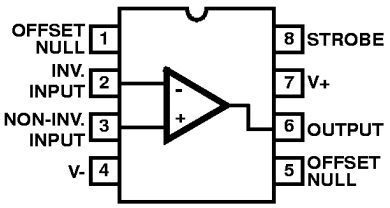

CA5420 (METAL CAN)
TOP VIEW

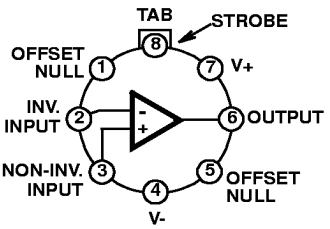

NOTE: Pin is connected to Case.

Functional Diagram

CA5420

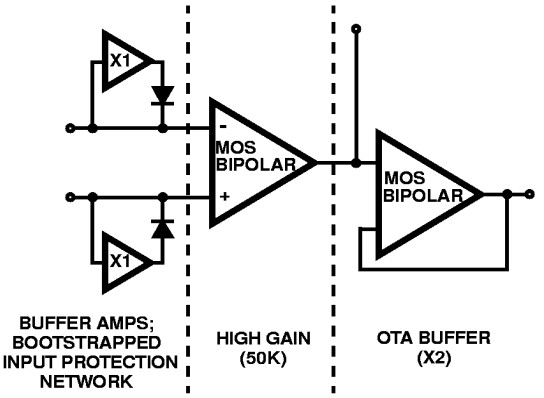

CAUTION: These devices are sensitive to electrostatic discharge. Users should follow proper IC Handling Procedures.

File Number **1925.3**

Absolute Maximum Ratings

Supply Voltage (Between V+ and V- Terminals) 22V
Differential Input Voltage 15V
Input Voltage . . . . . (V+ + 8V) to (V- -0.5V)
Input Current 1mA
Output Short Circuit Duration (Note 1) . . . . . Indefinite

Operating Conditions

Temperature Range . . . . . -55°C to 125°C

Thermal Information

Thermal Resistance (Typical, Note 2)	θ_{JA} (°C/W)	θ_{JC} (°C/W)
PDIP Package	96	N/A
SOIC Package	157	N/A
Metal Can Package	165	80

Maximum Junction Temperature (Metal Can) . . . . . 175°C
Maximum Junction Temperature (Plastic Package) . . . . . 150°C
Maximum Storage Temperature Range (All Types) . . . -65°C to 150°C
Maximum Lead Temperature (Soldering 10s) . . . . . 300°C
(SOIC - Lead Tips Only)

CAUTION: Stresses above those listed in "Absolute Maximum Ratings" may cause permanent damage to the device. This is a stress only rating and operation of the device at these or any other conditions above those indicated in the operational sections of this specification is not implied.

NOTES:

1. Short circuit may be applied to ground or to either supply.
2. θ_{JA} is measured with the component mounted on an evaluation PC board in free air.

Electrical Specifications

Typical Values Intended Only for Design Guidance. V+ = +5V; V- = GND, T_A = 25°C

PARAMETER		SYMBOL	TEST CONDITIONS		CA5420	CA5420A	UNITS
Input Resistance		R_I			150	150	TΩ
Input Capacitance		C_I			4.9	4.9	pF
Output Resistance		R_O			300	300	Ω
Equivalent Input Noise Voltage		e_N	f = 1kHz	R_S = 100Ω	62	62	nV/√Hz
			f = 10kHz		38	38	nV/√Hz
Short-Circuit Current	Source	$I_{OM}+$			2.6	2.6	mA
To Opposite Supply	Sink	$I_{OM}-$			2.4	2.4	mA
Gain Bandwidth Product		f_T			0.5	0.5	MHz
Slew Rate		SR			0.5	0.5	V/µs
Transient Response	Rise Time	t_r	R_L = 2kΩ, C_L = 100pF		0.7	0.7	µs
	Overshoot	OS			15	15	%
Current from Terminal 8 To V-		I_8+			20	20	µA
Current from Terminal 8 To V+		I_8-			2	2	mA
Settling Time		0.01%	A_V = 1	$2V_{P-P}$ Input	8	8	µs
		0.10%	A_V = 1	$2V_{P-P}$ Input	4.5	4.5	µs

Electrical Specifications

T_A = 25°C, V+ = 5V, V- = 0, Unless Otherwise Specified

PARAMETER	SYMBOL	TEST CONDITIONS	CA5420			CA5420A			UNITS
			MIN	TYP	MAX	MIN	TYP	MAX	
Input Offset Voltage	V_{IO}	V_O = 2.5V	-	1.5	10	-	1	5	mV
Input Offset Current	I_{IO}	V_O = 2.5V	-	0.02	1	-	0.02	0.5	pA
Input Current	I_I	V_O = 2.5V	-	0.02	2	-	0.02	1	pA
Common Mode Rejection Ratio	CMRR	V_{CM} = 0 to 3.7V, V_O = 2.5V	70	80	-	75	83	-	dB
Common Mode Input Voltage Range	$V_{ICR}+$	V_O = 2.5V	3.7	4	-	3.7	4	-	V
	$V_{ICR}-$		-	-0.3	0	-	-0.3	0	V
Power Supply Rejection Ratio	PSRR	ΔV+ = 1V; ΔV- = 1V	70	80	-	75	83	-	dB

Electrical Specifications $T_A = 25^oC$, V+ = 5V, V- = 0, Unless Otherwise Specified **(Continued)**

PARAMETER	SYMBOL	TEST CONDITIONS	CA5420 MIN	CA5420 TYP	CA5420 MAX	CA5420A MIN	CA5420A TYP	CA5420A MAX	UNITS
Large Signal Voltage Gain	A_{OL}								
V_O = 0.5 to 4V		$R_L = \infty$	85	87	-	85	87	-	dB
V_O = 0.5 to 4V		R_L = 10kΩ	85	87	-	85	87	-	dB
V_O = 0.7 to 3V		R_L = 2kΩ	80	85	-	80	85	-	dB
Source Current	I_{SOURCE}	V_O = 0V	1.2	2.7	-	1.2	2.7	-	mA
Sink Current	I_{SINK}	V_O = 5V	1.2	2.1	-	1.2	2.1	-	mA
Output Voltage	$V_{OM}+$	$R_L = \infty$	4.9	4.94	-	4.9	4.94	-	V
	$V_{OM}-$		-	0.13	0.15	-	0.13	0.15	V
	$V_{OM}+$	R_L = 10kΩ	4.7	4.9	-	4.7	4.9	-	V
	$V_{OM}-$		-	0.12	0.15	-	0.12	0.15	V
	$V_{OM}+$	R_L = 2kΩ	3.5	4.6	-	3.5	4.6	-	V
	$V_{OM}-$		-	0.1	0.15	-	0.1	0.15	V
Supply Current	I_{SUPPLY}	V_O = 0V	-	400	500	-	400	500	µA
		V_O = 2.5V	-	430	550	-	430	550	µA

Electrical Specifications $T_A = -55^oC$ to 125^oC, V+ = 5V, V- = 0, Unless Otherwise Specified

PARAMETER	SYMBOL	TEST CONDITIONS	CA5420 MIN	CA5420 TYP	CA5420 MAX	CA5420A MIN	CA5420A TYP	CA5420A MAX	UNITS
Input Offset Voltage	V_{IO}	V_O = 2.5V	-	3	15	-	2	10	mV
Input Offset Current	I_{IO}	V_O = 2.5V	-	1.5	3	-	1.5	3	nA
Up to $T_A = 85^oC$	I_{IO}		-	2	10	-	2	10	pA
Input Current	$\|I_I\|$	V_O = 2.5V	-	2	5	-	2	5	nA
Up to $T_A = 85^oC$	$\|I_I\|$		-	15	25	-	10	15	pA
Common Mode Rejection Ratio	CMRR	V_{CM} = 0 to 3.7V, V_O = 2.5V	65	75	-	70	80	-	dB
Common Mode Input Voltage Range	$V_{ICR}+$	V_O = 2.5V	3.7	4	-	3.7	4	-	V
	$V_{ICR}-$		-	-0.3	0	-	-0.3	0	V
Power Supply Rejection Ratio	PSRR	ΔV+ = 1V; ΔV- = 1V	65	80	-	70	83	-	dB
Large Signal Voltage Gain	A_{OL}								
V_O = 0.5 to 4V		$R_L = \infty$	80	85	-	85	87	-	dB
V_O = 0.7 to 4V		R_L = 10kΩ	80	85	-	80	87	-	dB
V_O = 0.7 to 2.5V		R_L = 2kΩ	75	80	-	75	80	-	dB
Source Current	I_{SOURCE}	V_O = 0V	1	2.7	-	1	2.7	-	mA
Sink Current	I_{SINK}	V_O = 5V	1	2.1	-	1	2.1	-	mA
Output Voltage	$V_{OM}+$	$R_L = \infty$	4.8	4.9	-	4.8	4.9	-	V
	$V_{OM}-$		-	0.16	0.2	-	0.16	0.2	V
	$V_{OM}+$	R_L = 10kΩ	4.7	4.9	-	4.7	4.9	-	V
	$V_{OM}-$		-	0.15	0.20	-	0.15	0.2	V
	$V_{OM}+$	R_L = 2kΩ	3	4	-	3	4	-	V
	$V_{OM}-$		-	0.14	0.2	-	0.14	0.2	V
Supply Current	I_{SUPPLY}	V_O = 0V	-	430	550	-	430	550	µA
		V_O = 2.5V	-	480	600	-	480	600	µA

Electrical Specifications For Equipment Design at V_{SUPPLY} = ±1V, T_A = 25°C, Unless Otherwise Specified

PARAMETER	SYMBOL	TEST CONDITIONS	CA5420			CA5420A			UNITS
			MIN	TYP	MAX	MIN	TYP	MAX	
Input Offset Voltage	V_{IO}		-	5	10	-	2	5	mV
Input Offset Current	$\|I_{IO}\|$		-	0.01	4 (Note 3)	-	0.01	4 (Note 3)	pA
Input Current	$\|I_I\|$		-	0.02	5 (Note 3)	-	0.02	5 (Note 3)	pA
Large Signal Voltage Gain	A_{OL}	R_L = 10kΩ	10	100	-	20	100	-	kV/V
			80	100	-	86	100	-	dB
Common Mode Rejection Ratio	CMRR		-	560	1800	-	560	1000	µV/V
			55	65	-	60	65	-	dB
Common Mode Input Voltage Range	V_{ICR}+		0.2	0.5	-	0.2	0.5	-	V
	V_{ICR}-		-	-1.3	-	-1	-1.3	-	V
Power Supply Rejection Ratio	PSRR		-	100	1000	-	32	320	µV/V
			60	80	-	70	90	-	dB
Maximum Output Voltage	V_{OM}+	R_L = ∞	0.9	0.95	-	0.9	0.95	-	V
	V_{OM}-		-0.85	-0.91	-	-0.85	-0.91	-	V
Supply Current	I_{SUPPLY}		-	350	650	-	350	650	µA
Device Dissipation	P_D		-	0.7	1.1	-	0.7	1.1	mW
Input Offset Voltage Temp. Drift	$\Delta V_{IO}/\Delta T$		-	4	-	-	4	-	µV/°C

Electrical Specifications For Equipment Design at V_{SUPPLY} = ±10V, T_A = 25°C, Unless Otherwise Specified

PARAMETER	SYMBOL	TEST CONDITIONS	CA5420			CA5420A			UNITS
			MIN	TYP	MAX	MIN	TYP	MAX	
Input Offset Voltage	V_{IO}		-	5	10	-	2	5	mV
Input Offset Current	$\|I_{IO}\|$		-	0.03	4 (Note 3)	-	0.03	4 (Note 3)	pA
Input Current	$\|I_I\|$		-	0.05	5 (Note 3)	-	0.05	5 (Note 3)	pA
Large Signal Voltage Gain	A_{OL}	R_L = 10kΩ	10	100	-	20	100	-	kV/V
			80	100	-	86	100	-	dB
Common Mode Rejection Ratio	CMRR		-	100	320	-	100	320	µV/V
			70	80	-	70	80	-	dB
Common Mode Input Voltage Range	V_{ICR}+		8.5	9.3	-	9	9.3	-	V
	V_{ICR}-		-10	-10.3	-	-10	-10.3	-	V
Power Supply Rejection Ratio	PSRR		-	32	320	-	32	320	µV/V
			70	90	-	70	90	-	dB
Maximum Output Voltage	V_{OM}+	R_L = ∞	9.7	9.9	-	9.7	9.9	-	V
	V_{OM}-		-9.7	-9.85	-	-9.7	-9.85	-	V
Supply Current	I_{SUPPLY}		-	450	1000	-	450	1000	µA
Device Dissipation	P_D		-	9	14	-	9	14	mW
Input Offset Voltage Temperature Drift	$\Delta V_{IO}/\Delta T$		-	4	-	-	4	-	µV/°C

NOTE:

3. The maximum limit represents the levels obtainable on high-speed automatic test equipment. Typical values are obtained under laboratory conditions.

Typical Applications

Picoammeter Circuit

The exceptionally low input current (typically 0.2pA) makes the CA5420 highly suited for use in a picoammeter circuit. With only a single 10GΩ resistor, this circuit covers the range from ±1.5pA. Higher current ranges are possible with suitable switching techniques and current scaling resistors. Input transient protection is provided by the 1MΩ resistor in series with the input. Higher current ranges require that this resistor be reduced. The 10MΩ resistor connected to pin 2 of the CA5420 decouples the potentially high input capacitance often associated with lower current circuits and reduces the tendency for the circuit to oscillate under these conditions.

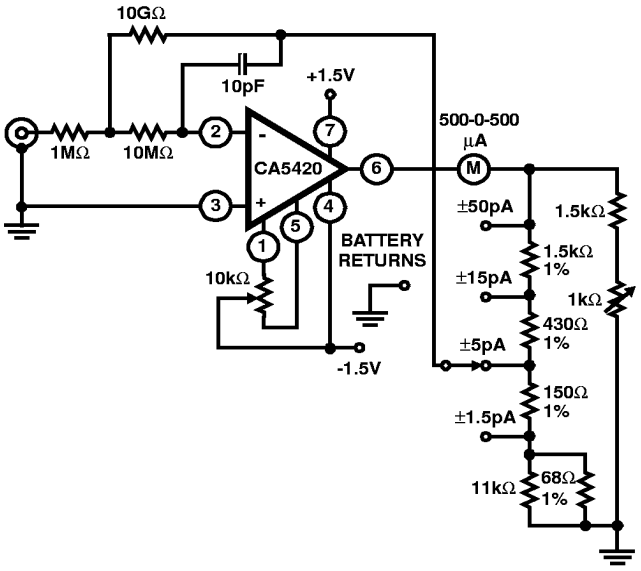

FIGURE 1. PICOAMMETER CIRCUIT

High Input Resistance Voltmeter

Advantage is taken of the high input impedance of the CA5420 in a high input resistance DC voltmeter. Only two 1.5V "AA" type penlite batteries power this exceedingly high-input resistance (>1,000,000MΩ) DC voltmeter. Full-scale deflection is ±500mV, ±150mV, and ±15mV. Higher voltage ranges are easily added with external input voltage attenuator networks.

The meter is placed in series with the gain network, thus eliminating the meter temperature coefficient error term.

Supply current in the standby position with the meter undeflected is 300µA. At full-scale deflection this current rises to 800µA. Carbon-zinc battery life should be in excess of 1,000 hours.

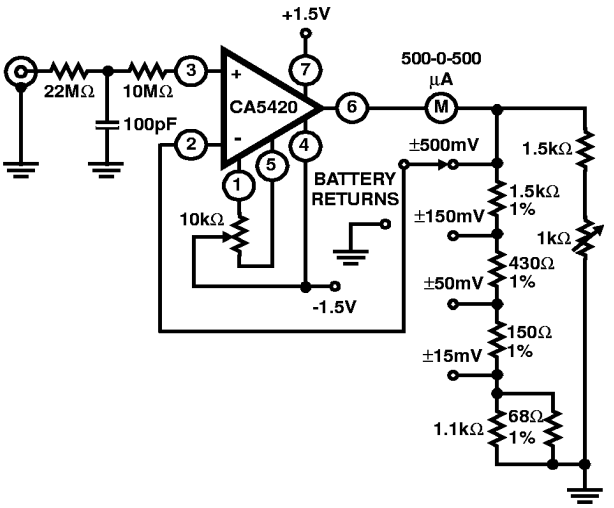

FIGURE 2. HIGH INPUT RESISTANCE VOLTMETER

Typical Performance Curves

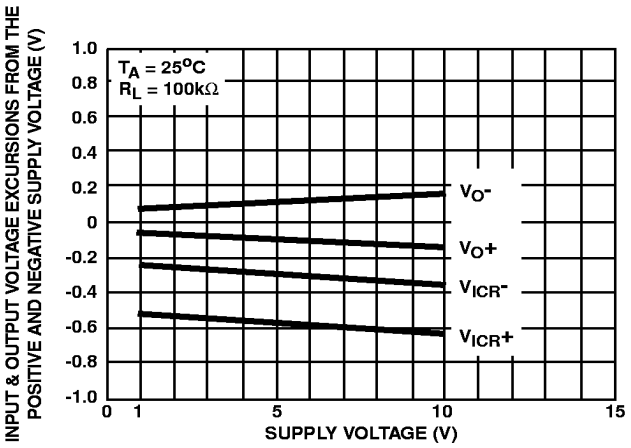

FIGURE 3. OUTPUT VOLTAGE SWING AND COMMON MODE INPUT VOLTAGE RANGE vs SUPPLY VOLTAGE

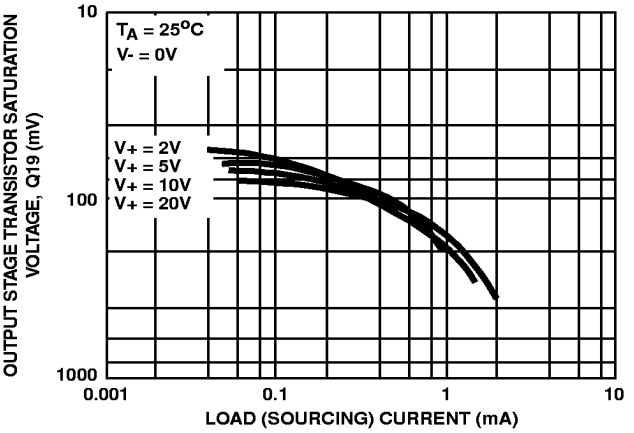

FIGURE 4. OUTPUT VOLTAGE vs LOAD SOURCING CURRENT

Typical Performance Curves (Continued)

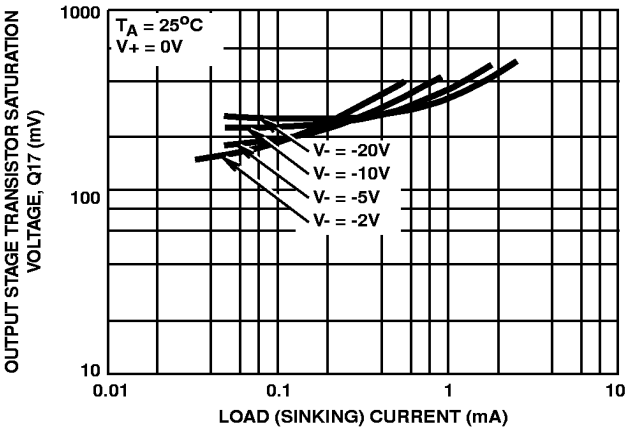

FIGURE 5. OUTPUT VOLTAGE vs LOAD SINKING CURRENT

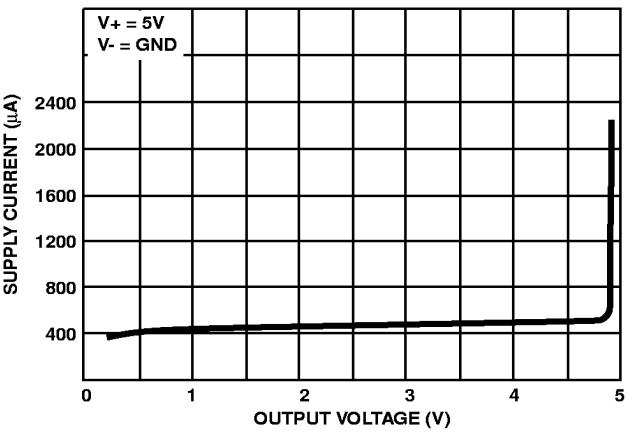

FIGURE 6. SUPPLY CURRENT vs OUTPUT VOLTAGE

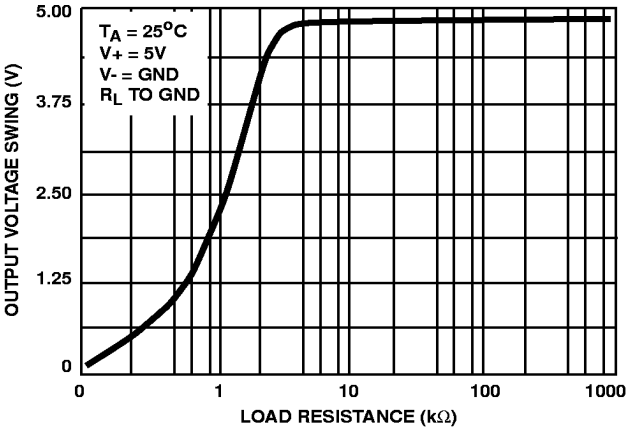

FIGURE 7. OUTPUT VOLTAGE SWING vs LOAD RESISTANCE

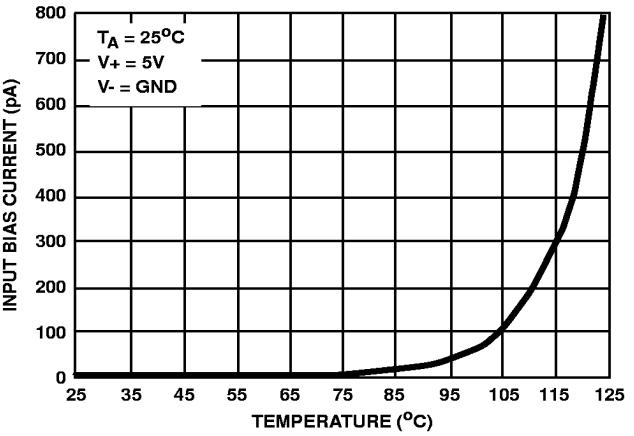

FIGURE 8. INPUT BIAS CURRENT DRIFT ($\Delta I_B/\Delta T$)

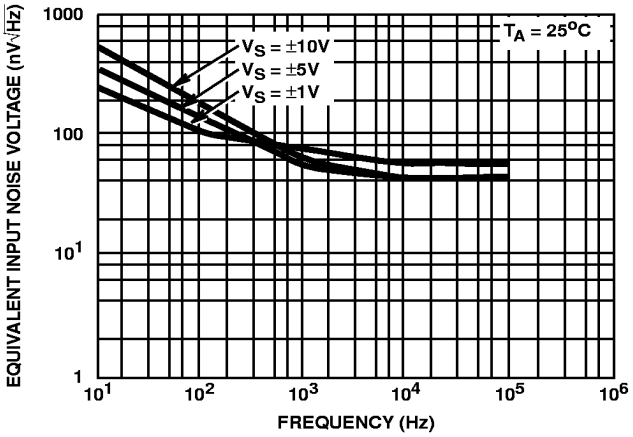

FIGURE 9. INPUT NOISE VOLTAGE vs FREQUENCY

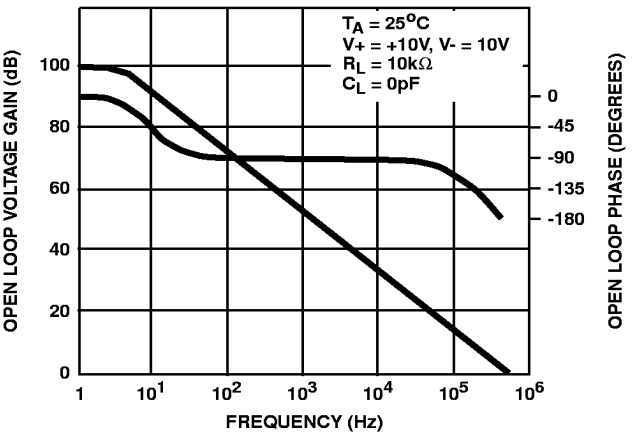

FIGURE 10. OPEN LOOP GAIN AND PHASE SHIFT RESPONSE