Unit in mm

Telecommunication

Data Acquisition

Measurement Instrumentation

The Toshiba TLP795G consists of an aluminum gallium arsenide infrared emitting diode optically coupled to a photo-MOSFET in a six lead plastic DIP package. The TLP795G is a bi-directional switch which can replace mechanical relays in many applications.

- Peak Off-State Voltage : 400V (Min.)
- Trigger LED Current : 5mA (Max.)
- On-State Current : 150mA (Max.) (A Connection)
- On-State Resistance : 12Ω (Max.) (A Connection)
- Isolation Voltage : 0.4mm (Min.)
- Isolation Voltage : $5000V_{rms}$ (Min.)

Supplementary Information	Page (s)
Lead Form Options	31-32
Tape and Reel	39-40

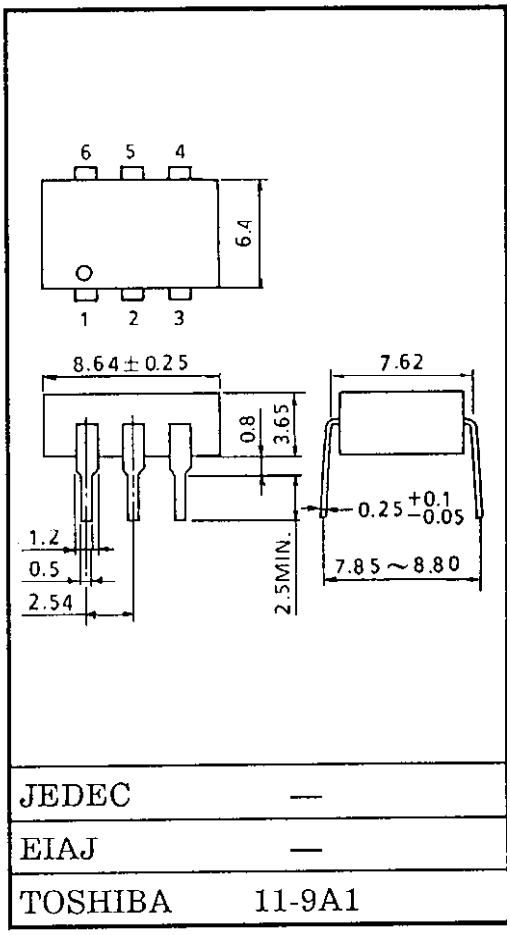

Weight : 0.49g

Pin Configuration (Top View)

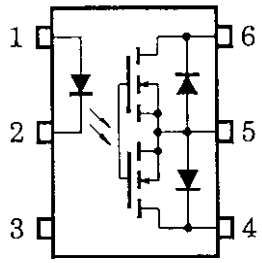

1 : ANODE
2 : CATHODE
3 : NC
4 : DRAIN D1
5 : SOURCE
6 : DRAIN D2

Schematic

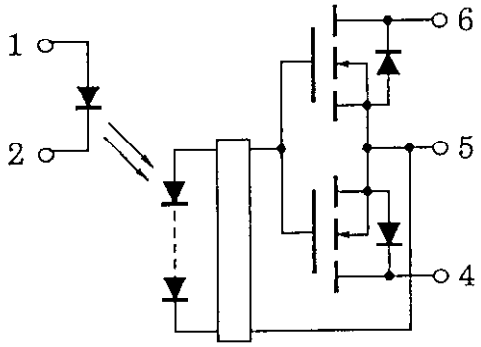

Maximum Ratings (Ta = 25°C)

CHARACTERISTIC			SYMBOL	RATING	UNIT
LED	Forward Current		I_F	30	mA
	Forward Current Derating (Ta ≥ 25°C)		ΔI_F/°C	-0.3	mA/°C
	Peak Forward Current (100µs pulse, 100pps)		I_{FP}	1	A
	Reverse Voltage		V_R	5	V
	Junction Temperature		T_j	125	°C
DETECTOR	Off-State Output Terminal Voltage		V_{OFF}	400	V
	On-State RMS Current	A Connection	I_{ON}	150	mA
		B Connection		200	
		C Connection		300	
	On-State Current Derating (Ta ≥ 25°C)	A Connection	ΔI_{ON}/°C	-1.5	mA/°C
		B Connection		-2.0	
		C Connection		-3.0	
	Junction Temperature		t_j	125	°C
Storage Temperature Range			T_{stg}	-55~100	°C
Operating Temperature Range			T_{opr}	-20~85	°C
Lead Soldering Temperature (10s)			T_{sol}	260	°C
Isolation Voltage (AC, 1 min., R.H. ≤ 60%)		(Note 1)	BV_S	5000	V_{rms}

Note 1:Device considered a two terminal device: pins 1, 2 and 3 shorted together, and pins 4, 5 and 8 shorted together.

Recommended Operating Conditions

CHARACTERISTIC	SYMBOL	MIN.	TYP.	MX.	UNIT
Supply Voltage	V_{DD}	–	–	320	V
Forward Current	I_F	10	15	20	mA
On-State Current	I_{ON}	–	–	150	mA
Operating Temperature	T_{opr}	-20	–	80	°C

Circuit Connections

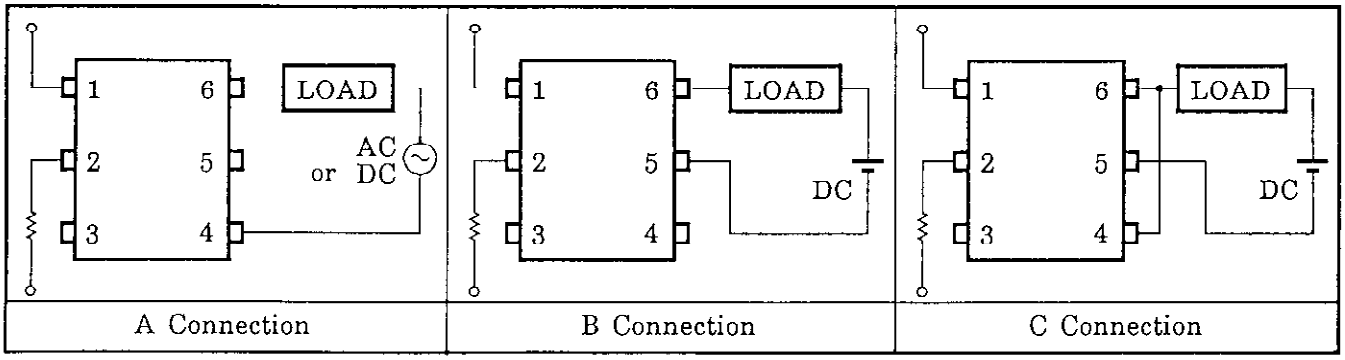

Individual Electrical Characteristics (Ta = -25°C)

CHARACTERISTIC		SYMBOL	TEST CONDITION	MIN.	TYP.*	MX.	UNIT
LED	Forward Voltage	V_F	I_F = 10mA	1.2	1.4	1.7	V
	Reverse Current	I_R	V_R = 3V	–	–	10	μA
	Capacitance	C_T	V = 0, f = 1MHz	–	15	–	pF
DETECTOR	Off-State Current	I_{OFF}	V_{OFF} = 400V	–	–	1	μA
	Capacitance	C_{OFF}	V = 0, f = 1MHz	–	–	–	pF

Coupled Electrical Characteristics (Ta = 25°C)

CHARACTERISTIC		SYMBOL	TEST CONDITION	MIN.	TYP.	MX.	UNIT
Trigger LED Current		I_{FT}	I_{ON} = 150mA	–	1	5	mA
On-State Resistance	A Connection	R_{ON}	I_{ON} = 150mA, I_F = 10mA	–	8	12	Ω
	B Connection		I_{ON} = 200mA, I_F = 10mA	–	4	6	
	C Connection		I_{ON} = 300mA, I_F = 10mA	–	2	3	

Isolation Characteristics (Ta = 25°C)

CHARACTERISTIC	SYMBOL	TEST CONDITION	MIN.	TYP.	MX.	UNIT
Capacitance Input to Output	C_S	V_S = 0, f = 1MHz	–	0.8	–	pF
Isolation Resistance	R_S	V_S = 500V, R.H. ≤ 60%	5×10^{10}	10^{14}	–	Ω
Isolation Voltage	BV_S	AC, 1 minute	2500	–	–	V_{rms}
		AC, 1 second in oil	–	10000	–	
		DC, 1 minute in oil	–	10000	–	V_{dc}

Switching Characteristics (Ta = 25°C)

CHARACTERISTIC	SYMBOL	TEST CONDITION	MIN.	TYP.	MX.	UNIT
Turn-on Time	t_{on}	V_{DD} = 20mA, R_L = 200Ω I_F = 10mA (Note 2)	–	0.3	1.0	ms
Turn-off Time	t_{off}		–	0.2	1.0	

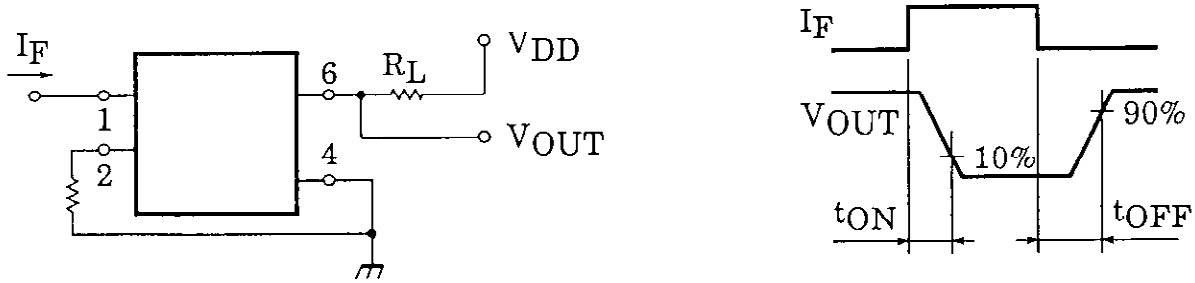

Figure 1. Switching Time Test Circuit

I_F – Ta

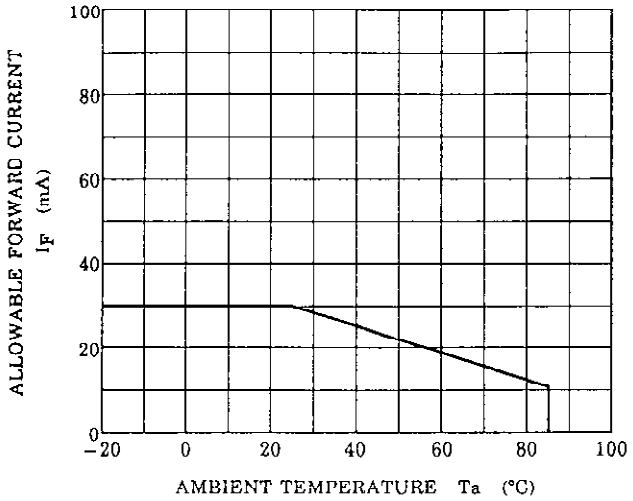

P_C – Ta

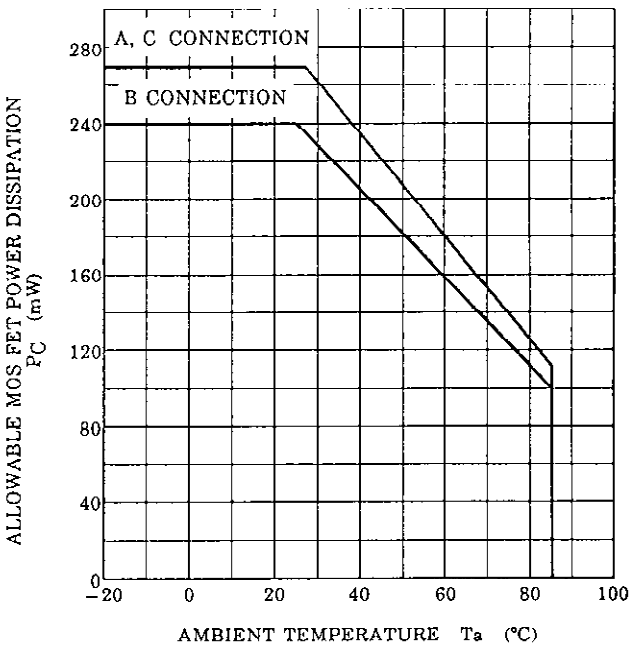

I_F – V_F

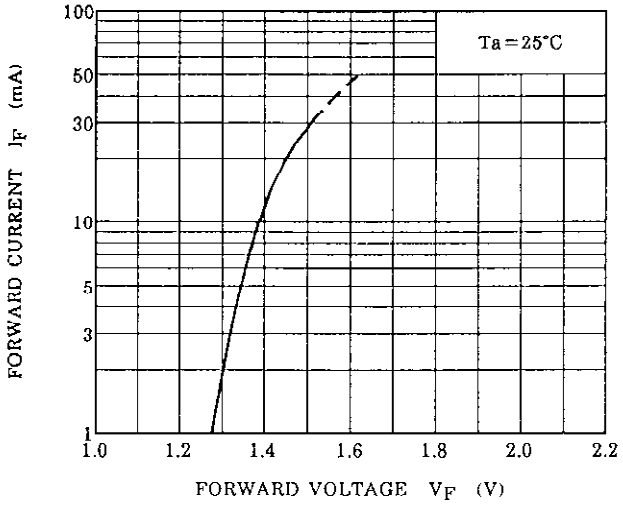

I_{ON} (RMS) – Ta

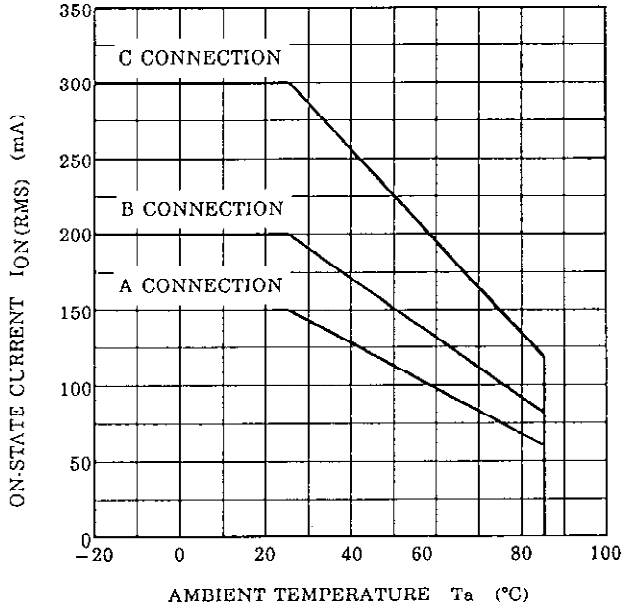

I_{FP} – D_R

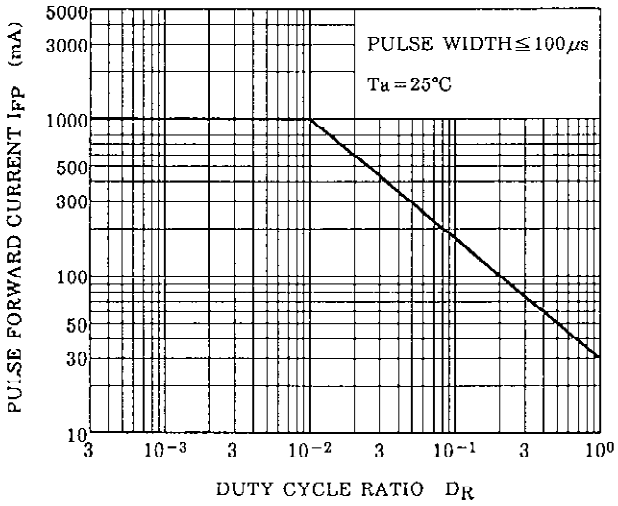

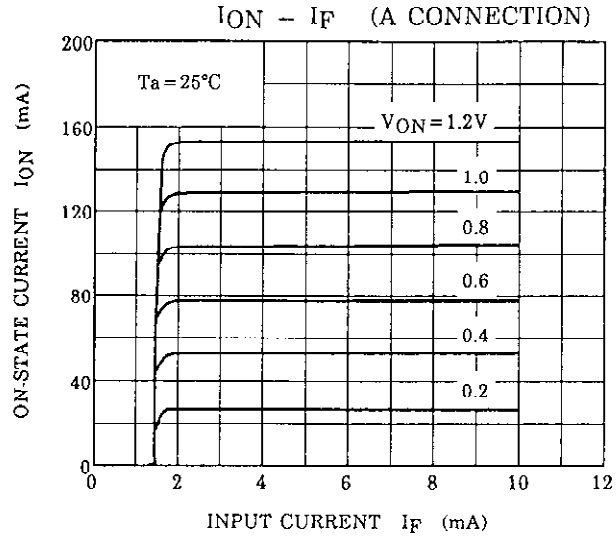
ION – IF (A CONNECTION)
Ta = 25°C
VON = 1.2V
1.0
0.8
0.6
0.4
0.2
ON-STATE CURRENT ION (mA)
INPUT CURRENT IF (mA)

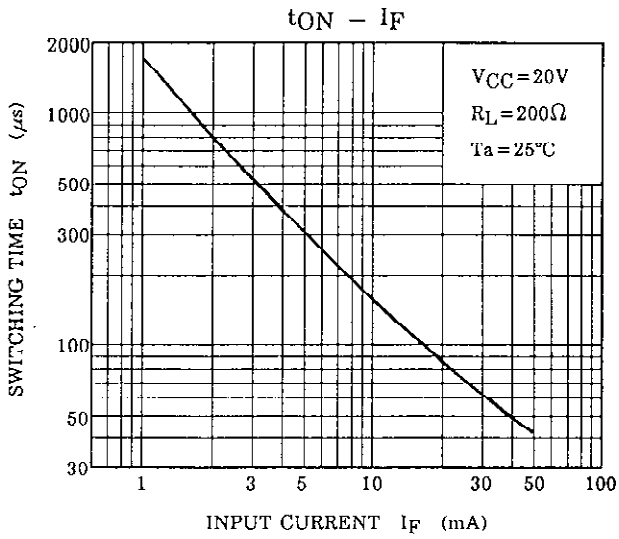
tON – IF
VCC = 20V
RL = 200Ω
Ta = 25°C
SWITCHING TIME tON (μs)
INPUT CURRENT IF (mA)

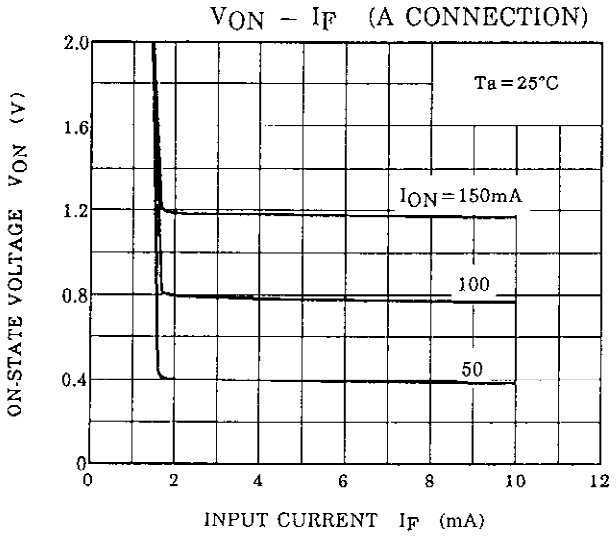
VON – IF (A CONNECTION)
Ta = 25°C
ION = 150mA
100
50
ON-STATE VOLTAGE VON (V)
INPUT CURRENT IF (mA)

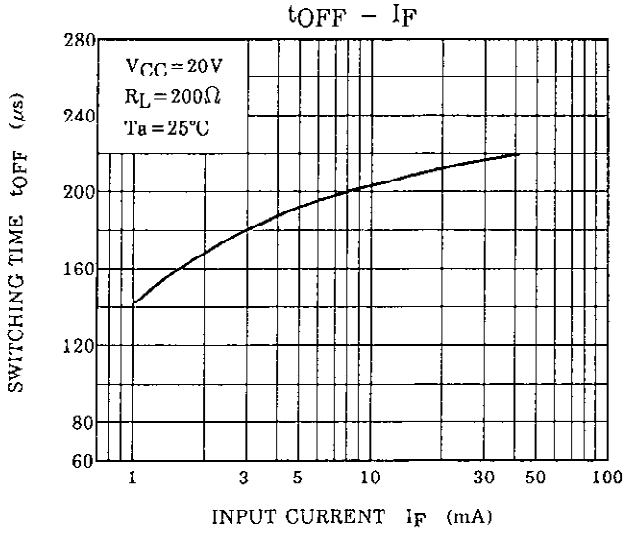
tOFF – IF
VCC = 20V
RL = 200Ω
Ta = 25°C
SWITCHING TIME tOFF (μs)
INPUT CURRENT IF (mA)

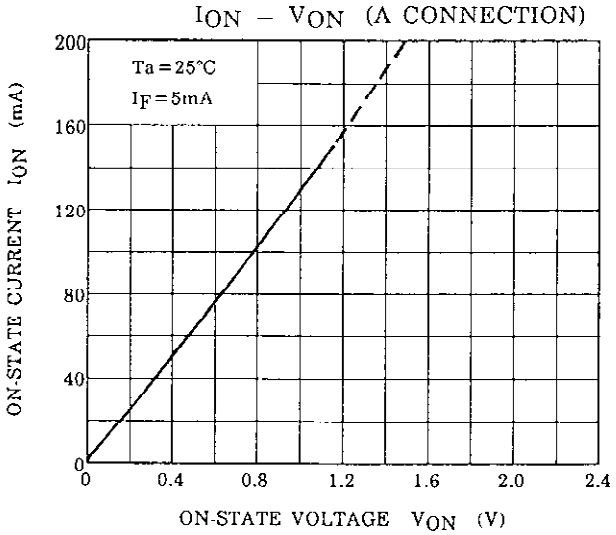
ION – VON (A CONNECTION)
Ta = 25°C
IF = 5mA
ON-STATE CURRENT ION (mA)
ON-STATE VOLTAGE VON (V)

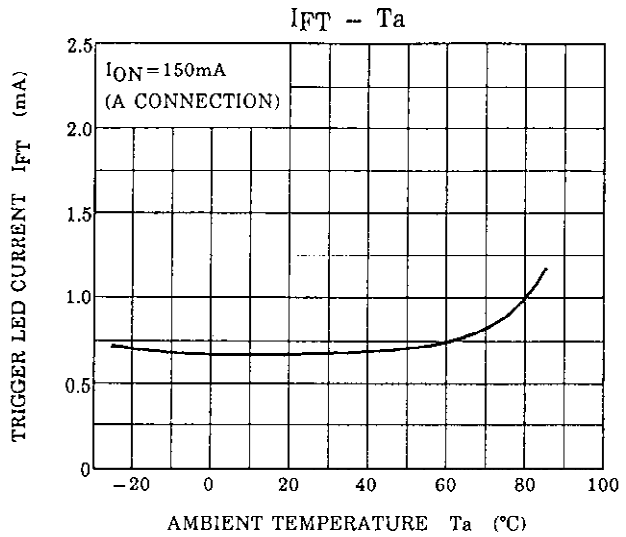
IFT – Ta
ION = 150mA
(A CONNECTION)
TRIGGER LED CURRENT IFT (mA)
2.5
2.0
1.5
1.0
0.5
0
−20
0
20
40
60
80
100
AMBIENT TEMPERATURE Ta (°C)

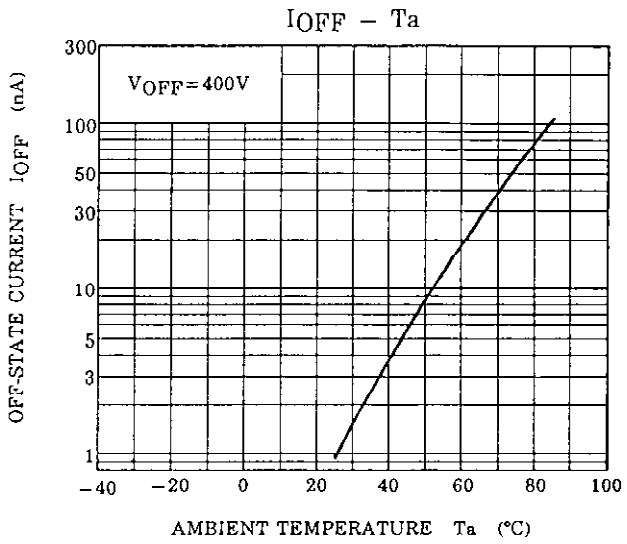
IOFF – Ta
VOFF = 400V
OFF-STATE CURRENT IOFF (nA)
300
100
50
30
10
5
3
1
−40
−20
0
20
40
60
80
100
AMBIENT TEMPERATURE Ta (°C)

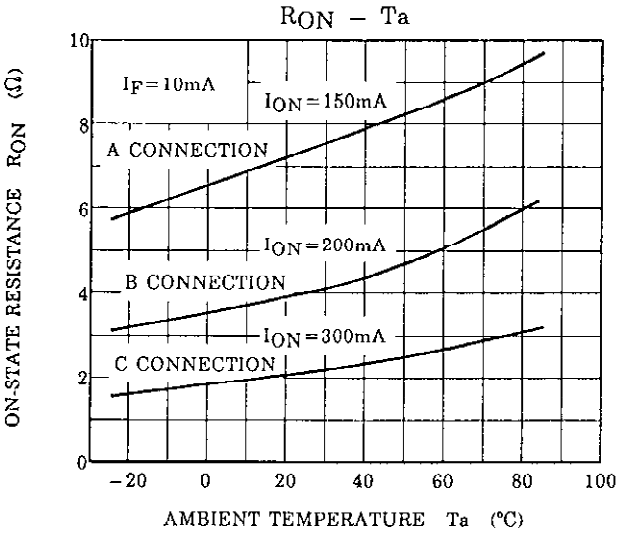
RON – Ta
IF = 10mA
ION = 150mA
A CONNECTION
ION = 200mA
B CONNECTION
ION = 300mA
C CONNECTION
ON-STATE RESISTANCE RON (Ω)
10
8
6
4
2
0
−20
0
20
40
60
80
100
AMBIENT TEMPERATURE Ta (°C)

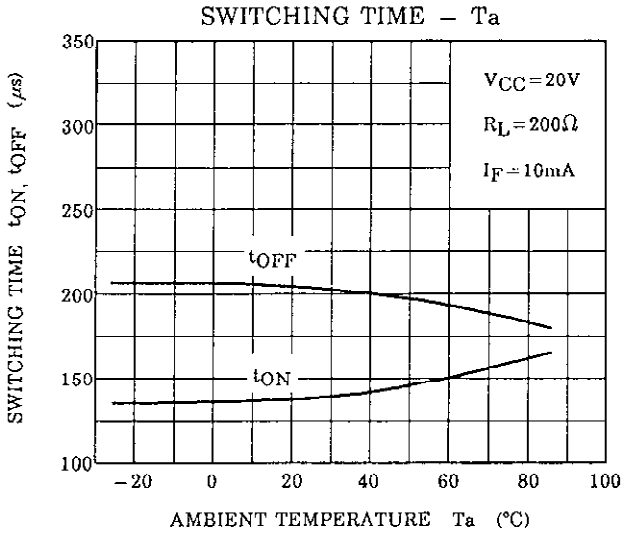
SWITCHING TIME – Ta
VCC = 20V
RL = 200Ω
IF = 10mA
tOFF
tON
SWITCHING TIME tON, tOFF (μs)
350
300
250
200
150
100
−20
0
20
40
60
80
100
AMBIENT TEMPERATURE Ta (°C)