# M48Z129Y
# M48Z129V

## 1 Mbit (128Kb x8) ZEROPOWER® SRAM

**PRELIMINARY DATA**

- INTEGRATED LOW POWER SRAM, POWER-FAIL CONTROL CIRCUIT and BATTERY
- CONVENTIONAL SRAM OPERATION; UNLIMITED WRITE CYCLES
- 10 YEARS of DATA RETENTION in the ABSENCE of POWER
- MICROPROCESSOR POWER-ON RESET (Valid even during battery back-up mode)
- BATTERY LOW PIN PROVIDES EARLY WARNING of BATTERY END-OF-LIFE
- AUTOMATIC POWER-FAIL CHIP DESELECT and WRITE PROTECTION
- WRITE PROTECT VOLTAGE ($V_{PFD}$ = Power-fail Deselect Voltage):
  - M48Z129Y: $4.20V \leq V_{PFD} \leq 4.50V$
  - M48Z129V: $2.70V \leq V_{PFD} \leq 3.00V$
- BATTERY INTERNALLY ISOLATED UNTIL POWER IS APPLIED
- COMPATIBLE with STANDARD 128Kx8 SRAMs

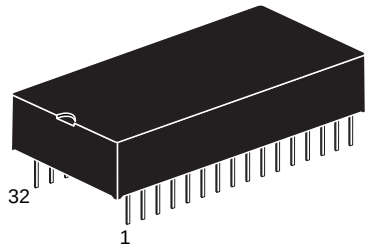


PMDIP32 (PM)
Module

**Figure 1. Logic Diagram**

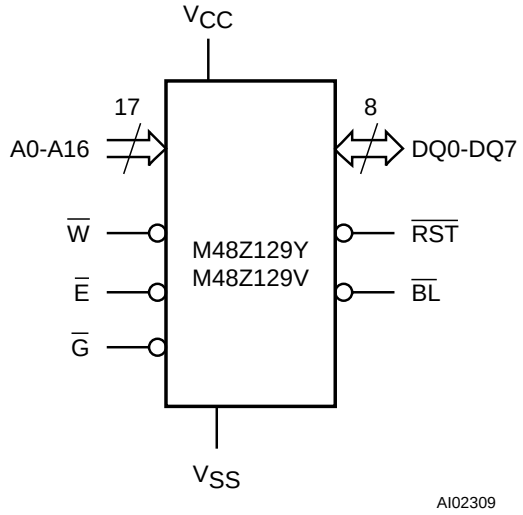


### DESCRIPTION

The M48Z129Y/129V ZEROPOWER® RAM is a non-volatile 1,048,576 bit Static RAM organized as 131,072 words by 8 bits. The devices combines an internal lithium battery, a CMOS SRAM and a control circuit in a plastic 32 pin DIP Module.

A Battery Low ($\overline{BL}$) pin warns the user of battery end-of-life, providing true data non-volatility. The open-drain Reset ($\overline{RST}$) output pin is used to provide a reset pulse, insuring proper system operation. Due to the ultra-low power required by the M48Z129Y/129V, nominal battery life exceeds 10 years, thus outlasting the useful lifetime of most end-user equipment.

## DIP Pin Connections

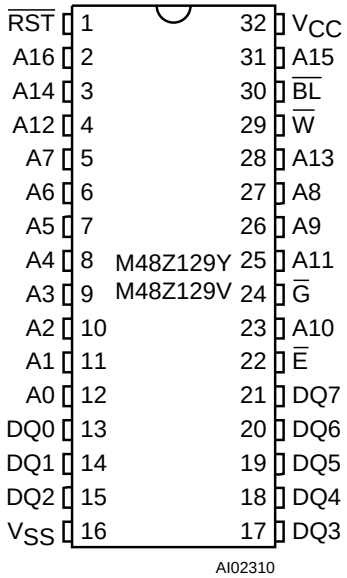


## Ordering Information Scheme

For a list of available options or for further information on any aspect of this device, please contact the STMicroelectronics Sales Office nearest to you.

Example: M48Z129Y -70 PM 1

**Supply Voltage and Write Protect Voltage**

129Y $V_{CC}$ = 4.5V to 5.5V
$V_{PFD}$ = 4.2V to 4.5V

129V $V_{CC}$ = 3.0V to 3.6V
$V_{PFD}$ = 2.7V to 3.0V

**Speed**

-70 70ns

**Package**

PM PMDIP32

**Temperature Range**

1 0 to 70 °C

## Signal Names

| | |
|---|---|
| A0-A16 | Address Inputs |
| DQ0-DQ7 | Data Inputs / Outputs |
| $\overline{E}$ | Chip Enable |
| $\overline{G}$ | Output Enable |
| $\overline{W}$ | Write Enable |
| $\overline{RST}$ | Reset Output (Open Drain) |
| $\overline{BL}$ | Battery Low Output |
| $V_{CC}$ | Supply Voltage |
| $V_{SS}$ | Ground |

## PMDIP32 - 32 pin Plastic DIP Module

| Symb | mm | | | inches | | |
|---|---|---|---|---|---|---|
| | Typ | Min | Max | Typ | Min | Max |
| A | | 9.27 | 9.52 | | 0.365 | 0.375 |
| A1 | | 0.38 | – | | 0.015 | – |
| B | | 0.43 | 0.59 | | 0.017 | 0.023 |
| C | | 0.20 | 0.33 | | 0.008 | 0.013 |
| D | | 42.42 | 43.18 | | 1.670 | 1.700 |
| E | | 18.03 | 18.80 | | 0.710 | 0.740 |
| e1 | | 2.29 | 2.79 | | 0.090 | 0.110 |
| e3 | | 34.29 | 41.91 | | 1.350 | 1.650 |
| eA | | 14.99 | 16.00 | | 0.590 | 0.630 |
| L | | 3.05 | 3.81 | | 0.120 | 0.150 |
| S | | 1.91 | 2.79 | | 0.075 | 0.110 |
| N | 32 | | | 32 | | |

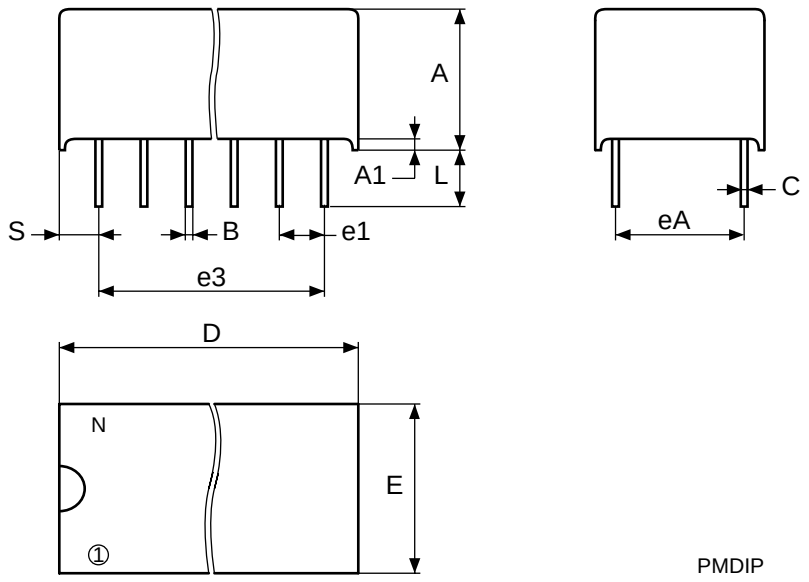


Drawing is not to scale.