TC1223/TC1224

50mA and 100mA CMOS LDOs with Shutdown

Features

- Extremely Low Ground Current for Longer Battery Life
- Very Low Dropout Voltage
- Choice of 50mA and 100mA Output (TC1223, TC1224, Respectively)
- High Output Voltage Accuracy
- Standard or Custom Output Voltages
- Power Saving Shutdown Mode
- Over Current and Over Temperature Protection
- Space-Saving 5-Pin SOT-23A Package
- Pin Compatible Upgrades for Bipolar Regulators

Applications

- Battery Operated Systems
- Portable Computers
- Medical Instruments
- Instrumentation
- Cellular/GSM/PHS Phones
- Linear Post-Regulators for SMPS
- Pagers

Device Selection Table

Part Number	Package	Junction Temp. Range
TC1223-xxVCT	5-Pin SOT-23A	-40°C to +125°C
TC1224-xxVCT	5-Pin SOT-23A	-40°C to +125°C

NOTE: xx indicates output voltages

Available Output Voltages: 2.5, 2.7, 2.8, 2.85, 3.0, 3.3, 3.6, 4.0, 5.0.

Other output voltages are available. Please contact Microchip Technology Inc. for details.

Package Type

5-Pin SOT-23A

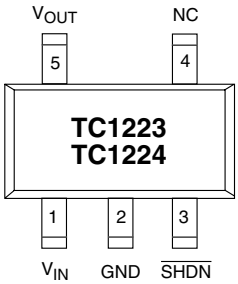

NOTE: 5-Pin SOT-23A is equivalent to the EIAJ (SC-74A)

General Description

The TC1223 and TC1224 are high accuracy (typically ±0.5%) CMOS upgrades for older (bipolar) low dropout regulators such as the LP2980. Designed specifically for battery-operated systems, the devices' CMOS construction eliminates wasted ground current, significantly extending battery life. Total supply current is typically 50µA at full load (20 to 60 times lower than in bipolar regulators).

The devices' key features include ultra low noise operation; very low dropout voltage (typically 85mV, TC1223 and 180mV, TC1224 at full load) and fast response to step changes in load. Supply current is reduced to 0.5µA (max) and V_{OUT} falls to zero when the shutdown input is low. The devices incorporate both over temperature and over current protection.

The TC1223 and TC1224 are stable with an output capacitor of only 1µF and have a maximum output current of 50mA and 100mA respectively. For higher output current versions, please see the TC1107, TC1108 and TC1173 (I_{OUT} = 300mA) data sheets.

Typical Application

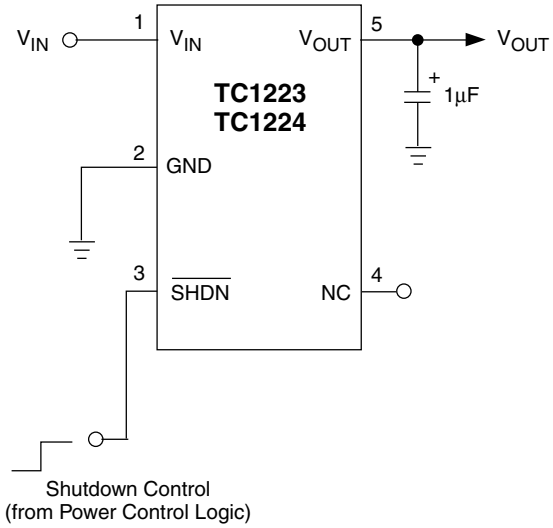

© 2002 Microchip Technology Inc.

1.0 ELECTRICAL SPECIFICATIONS

Absolute Maximum Ratings*

Input Voltage 6.5V
Output Voltage..... (-0.3V) to (V_{IN} + 0.3V)
Power Dissipation.....Internally Limited
Maximum Voltage on Any Pin .....V_{IN} +0.3V to -0.3V
Operating Temperature Range..... -40°C < T_J < 125°C
Storage Temperature.....-65°C to +150°C

Stresses above those listed under "Absolute Maximum Ratings" may cause permanent damage to the device. These are stress ratings only and functional operation of the device at these or any other conditions above those indicated in the operation sections of the specifications is not implied. Exposure to Absolute Maximum Rating conditions for extended periods may affect device reliability.

TC1223/TC1224 ELECTRICAL SPECIFICATIONS

Electrical Characteristics: V_{IN} = V_{OUT} + 1V, I_L = 100µA, C_L = 3.3µF, $\overline{SHDN}$ > V_{IH}, T_A = 25°C, unless otherwise noted. **Boldface** type specifications apply for junction temperatures of -40°C to +125°C.

Symbol	Parameter	Min	Typ	Max	Units	Test Conditions
V_{IN}	Input Operating Voltage	**2.7**	—	**6.0**	V	**Note 8**
I_{OUTMAX}	Maximum Output Current	**50** **100**	— —	— —	mA	TC1223 TC1224
V_{OUT}	Output Voltage	**V_R – 2.5%**	V_R ±0.5%	**V_R + 2.5%**	V	**Note 1**
TCV_{OUT}	V_{OUT} Temperature Coefficient	— —	20 **40**	— —	ppm/°C	**Note 2**
$\Delta V_{OUT}/\Delta V_{IN}$	Line Regulation	—	0.05	**0.35**	%	(V_R + 1V) ≤ V_{IN} ≤ 6V
$\Delta V_{OUT}/V_{OUT}$	Load Regulation	—	0.5	**2**	%	I_L = 0.1mA to I_{OUTMAX} **(Note 3)**
V_{IN}-V_{OUT}	Dropout Voltage TC1224	— — — —	2 65 85 180	— — **120** **250**	mV	I_L = 100µA I_L = 20mA I_L = 50mA I_L = 100mA **(Note 4)**
I_{IN}	Supply Current	—	50	**80**	µA	$\overline{SHDN}$ = V_{IH}, I_L = 0 **(Note 7)**
I_{INSD}	Shutdown Supply Current	—	0.05	**0.5**	µA	$\overline{SHDN}$ = 0V
PSRR	Power Supply Rejection Ratio	—	64	—	dB	F_{RE} ≤ 1kHz
I_{OUTSC}	Output Short Circuit Current	—	300	450	mA	V_{OUT} = 0V
$\Delta V_{OUT}/\Delta P_D$	Thermal Regulation	—	0.04	—	V/W	**Notes 5, 6**
T_{SD}	Thermal Shutdown Die Temperature	—	160	—	°C	
ΔT_{SD}	Thermal Shutdown Hysteresis	—	10	—	°C	
eN	Output Noise	—	260	—	nV/$\sqrt{Hz}$	I_L = I_{OUTMAX}
$\overline{SHDN}$ Input						
V_{IH}	$\overline{SHDN}$ Input High Threshold	**45**	—	—	%V_{IN}	V_{IN} = 2.5V to 6.5V
V_{IL}	$\overline{SHDN}$ Input Low Threshold	—	—	**15**	%V_{IN}	V_{IN} = 2.5V to 6.5V

Note 1: V_R is the regulator output voltage setting. For example: V_R = 2.5V, 2.7V, 2.85V, 3.0V, 3.3V, 3.6V, 4.0V, 5.0V.

2: $TC\ V_{OUT} = \frac{(V_{OUTMAX} - V_{OUTMIN}) \times 10^6}{V_{OUT} \times \Delta T}$

3: Regulation is measured at a constant junction temperature using low duty cycle pulse testing. Load regulation is tested over a load range from 0.1mA to the maximum specified output current. Changes in output voltage due to heating effects are covered by the thermal regulation specification.

4: Dropout voltage is defined as the input to output differential at which the output voltage drops 2% below its nominal value at a 1V differential.

5: Thermal Regulation is defined as the change in output voltage at a time T after a change in power dissipation is applied, excluding load or line regulation effects. Specifications are for a current pulse equal to I_{LMAX} at V_{IN} = 6V for T = 10 msec.

6: The maximum allowable power dissipation is a function of ambient temperature, the maximum allowable junction temperature and the thermal resistance from junction-to-air (i.e., T_A, T_J, θ_{JA}). Exceeding the maximum allowable power dissipation causes the device to initiate thermal shutdown. Please see Section 4.0 Thermal Considerations for more details.

7: Apply for Junction Temperatures of -40°C to +85°C.

8: The minimum V_{IN} has to justify the conditions: V_{IN} ≥ V_R + $V_{DROPOUT}$ and V_{IN} ≥ 2.7V for I_L = 0.1mA to I_{OUTMAX}.

© 2002 Microchip Technology Inc.

2.0 PIN DESCRIPTIONS

The descriptions of the pins are listed in Table 2-1.

TABLE 2-1: PIN FUNCTION TABLE

Pin No. (5-Pin SOT-23A)	Symbol	Description
1	V_{IN}	Unregulated supply input.
2	GND	Ground terminal.
3	$\overline{SHDN}$	Shutdown control input. The regulator is fully enabled when a logic high is applied to this input. The regulator enters shutdown when a logic low is applied to this input. During shutdown, output voltage falls to zero and supply current is reduced to 0.5µA (max).
4	NC	No connect.
5	V_{OUT}	Regulated voltage output.

3.0 DETAILED DESCRIPTION

The TC1223 and TC1224 are precision fixed output voltage regulators. Unlike bipolar regulators, the TC1223 and TC1224's supply current does not increase with load current. In addition, V_{OUT} remains stable and within regulation over the entire 0mA to I_{OUTMAX} operating load current range, (an important consideration in RTC and CMOS RAM battery back-up applications).

Figure 3-1 shows a typical application circuit. The regulator is enabled any time the shutdown input ($\overline{SHDN}$) is at or above V_{IH}, and shutdown (disabled) when $\overline{SHDN}$ is at or below V_{IL}. $\overline{SHDN}$ may be controlled by a CMOS logic gate, or I/O port of a micro-controller. If the $\overline{SHDN}$ input is not required, it should be connected directly to the input supply. While in shutdown, supply current decreases to 0.05µA (typical) and V_{OUT} falls to zero volts.

FIGURE 3-1: TYPICAL APPLICATION CIRCUIT

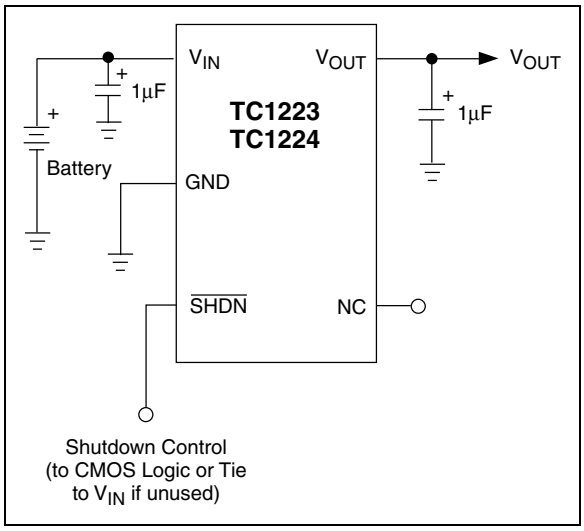

3.1 Output Capacitor

A 1µF (min) capacitor from V_{OUT} to ground is recommended. The output capacitor should have an effective series resistance greater than 0.1Ω and less than 5.0Ω, and a resonant frequency above 1MHz. A 1µF capacitor should be connected from V_{IN} to GND if there is more than 10 inches of wire between the regulator and the AC filter capacitor, or if a battery is used as the power source. Aluminum electrolytic or tantalum capacitor types can be used. (Since many aluminum electrolytic capacitors freeze at approximately -30°C, solid tantalums are recommended for applications operating below -25°C.) When operating from sources other than batteries, supply-noise rejection and transient response can be improved by increasing the value of the input and output capacitors and employing passive filtering techniques.

© 2002 Microchip Technology Inc.

4.0 THERMAL CONSIDERATIONS

4.1 Thermal Shutdown

Integrated thermal protection circuitry shuts the regulator off when die temperature exceeds 160°C. The regulator remains off until the die temperature drops to approximately 150°C.

4.2 Power Dissipation

The amount of power the regulator dissipates is primarily a function of input and output voltage, and output current. The following equation is used to calculate worst case actual power dissipation:

EQUATION 4-1:

$$P_D \approx (V_{INMAX} - V_{OUTMIN})I_{LOADMAX}$$

Where:

P_D = Worst case actual power dissipation
V_{INMAX} = Maximum voltage on V_{IN}
V_{OUTMIN} = Minimum regulator output voltage
$I_{LOADMAX}$ = Maximum output (load) current

The maximum allowable power dissipation (Equation 4-2) is a function of the maximum ambient temperature (T_{AMAX}), the maximum allowable die temperature (T_{JMAX}) and the thermal resistance from junction-to-air (θ_{JA}). The 5-Pin SOT-23A package has a θ_{JA} of approximately 220°C/Watt.

EQUATION 4-2:

$$P_{DMAX} = \frac{(T_{JMAX} - T_{AMAX})}{\theta_{JA}}$$

Where all terms are previously defined.

Equation 4-1 can be used in conjunction with Equation 4-2 to ensure regulator thermal operation is within limits. For example:

Given:

V_{INMAX} = 3.0V ±10%
V_{OUTMIN} = 2.7V – 2.5%
$I_{LOADMAX}$ = 40mA
T_{JMAX} = 125°C
T_{AMAX} = 55°C

Find: 1. Actual power dissipation
2. Maximum allowable dissipation

Actual power dissipation:

$$P_D \approx (V_{INMAX} - V_{OUTMIN})I_{LOADMAX}$$
$$= [(3.0 \times 1.1) - (2.7 \times .975)]40 \times 10^{-3}$$
$$= 26.7\text{mW}$$

Maximum allowable power dissipation:

$$P_{DMAX} = \frac{(T_{JMAX} - T_{AMAX})}{\theta_{JA}}$$
$$= \frac{(125 - 55)}{220}$$
$$= 318\text{mW}$$

In this example, the TC1223 dissipates a maximum of 26.7mW; below the allowable limit of 318mW. In a similar manner, Equation 4-1 and Equation 4-2 can be used to calculate maximum current and/or input voltage limits.

4.3 Layout Considerations

The primary path of heat conduction out of the package is via the package leads. Therefore, layouts having a ground plane, wide traces at the pads, and wide power supply bus lines combine to lower θ_{JA} and therefore increase the maximum allowable power dissipation limit.

© 2002 Microchip Technology Inc.

5.0 TYPICAL CHARACTERISTICS

(Unless Otherwise Specified, All Parts Are Measured At Temperature = 25°C)

Note: The graphs and tables provided following this note are a statistical summary based on a limited number of samples and are provided for informational purposes only. The performance characteristics listed herein are not tested or guaranteed. In some graphs or tables, the data presented may be outside the specified operating range (e.g., outside specified power supply range) and therefore outside the warranted range.

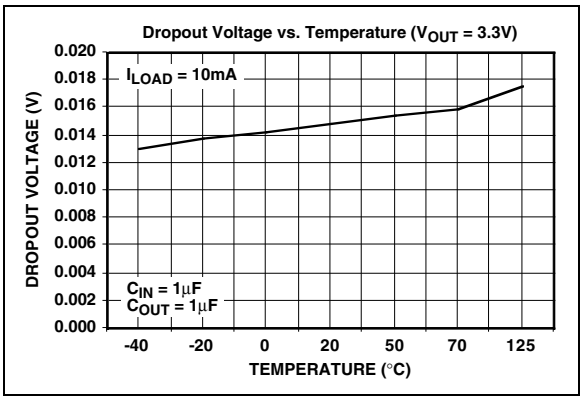

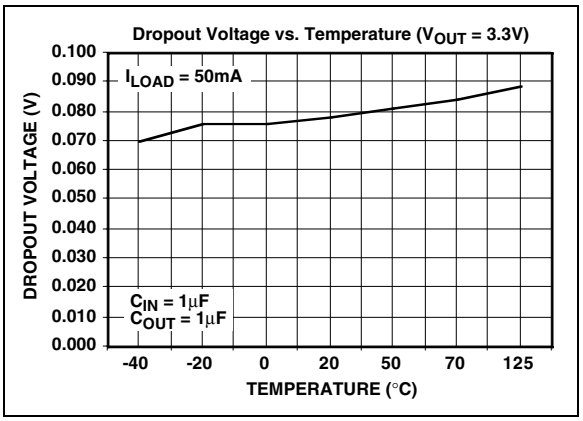

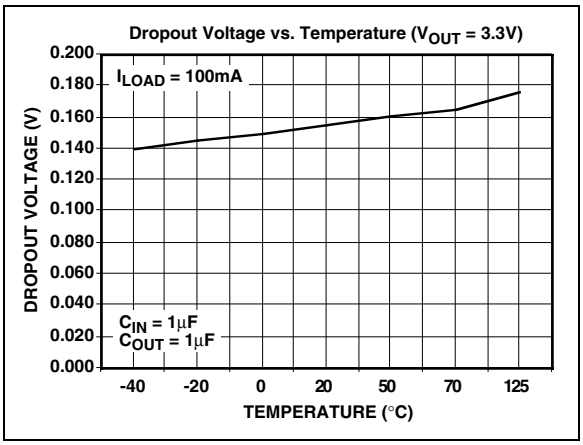

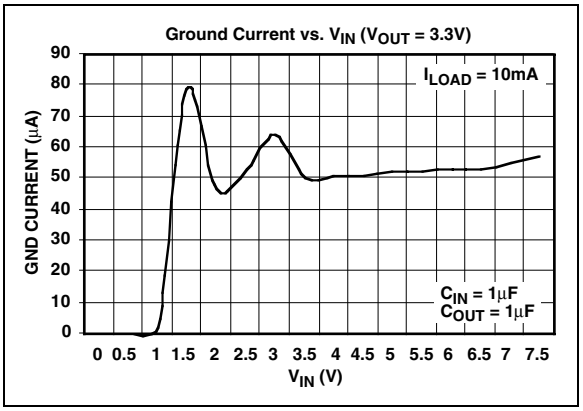

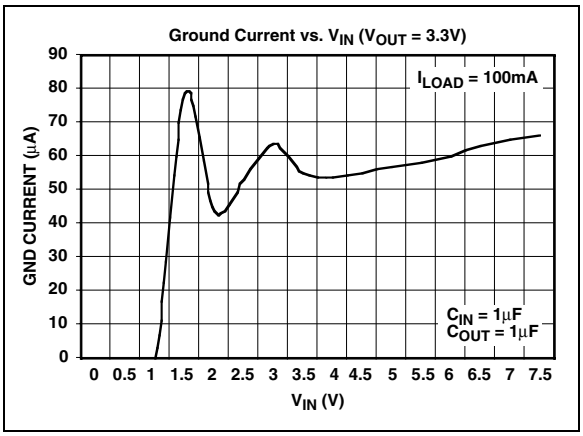

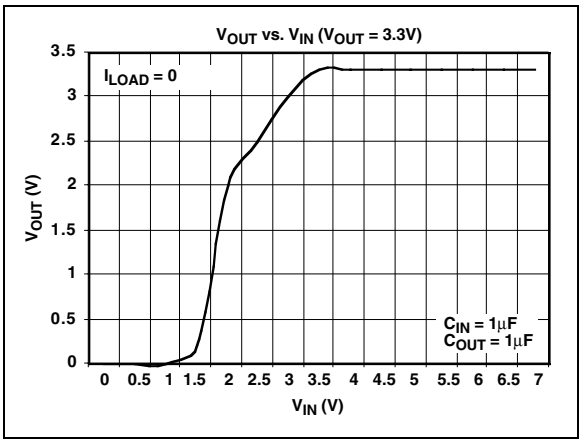

© 2002 Microchip Technology Inc.

5.0 TYPICAL CHARACTERISTICS (CONTINUED)

(Unless Otherwise Specified, All Parts Are Measured At Temperature = 25°C)

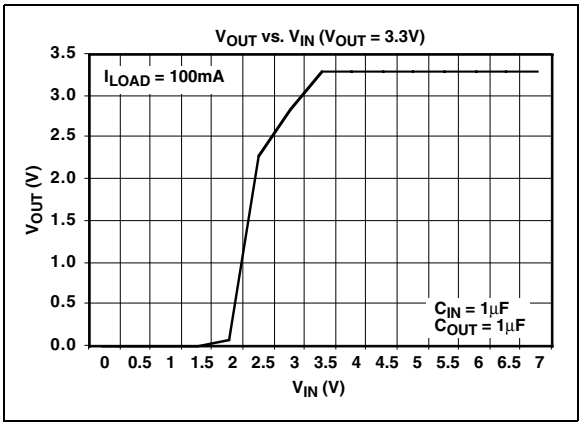

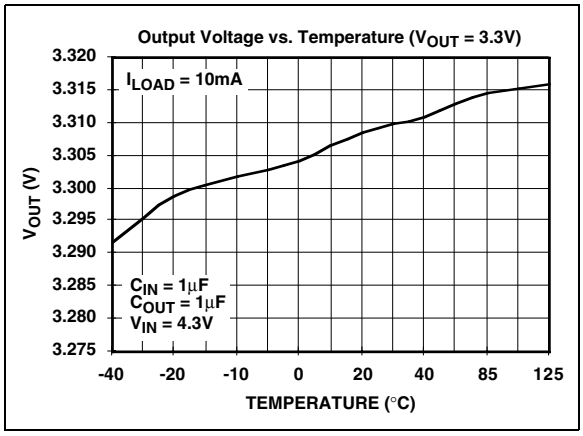

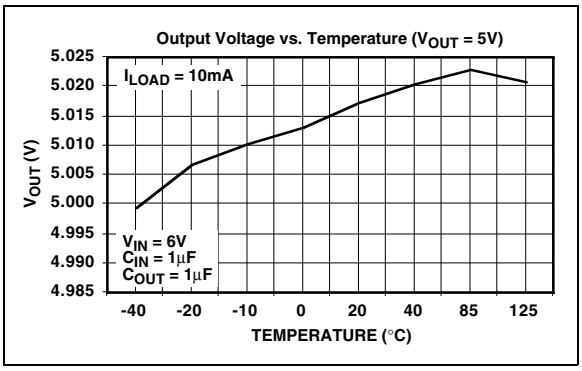

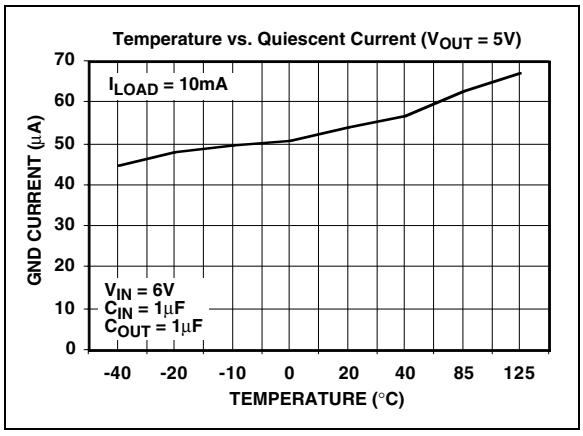

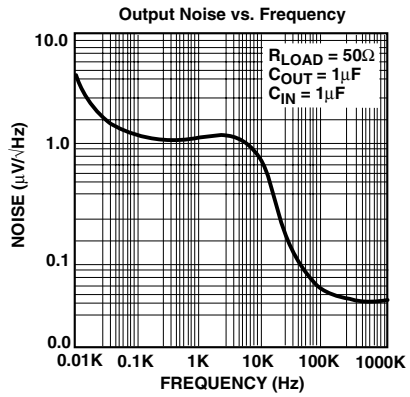

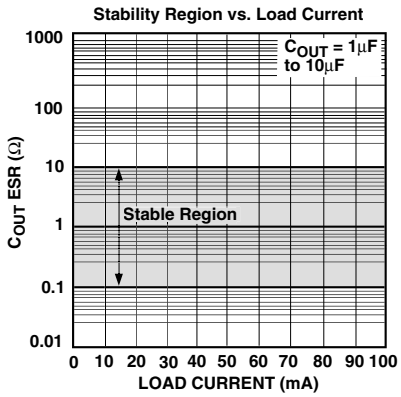

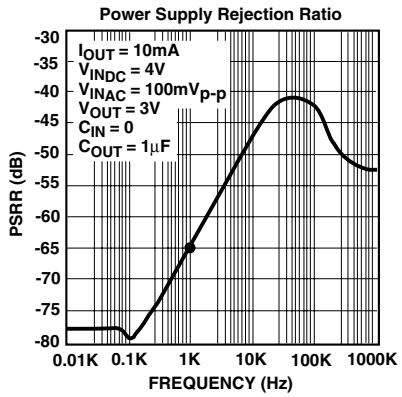

5.0 TYPICAL CHARACTERISTICS (CONTINUED)

Measure Rise Time of 3.3V LDO

Conditions: C_{IN} = 1µF, C_{OUT} = 1µF, I_{LOAD} = 100mA, V_{IN} = 4.3V, Temp = 25°C, Fall Time = 184µS

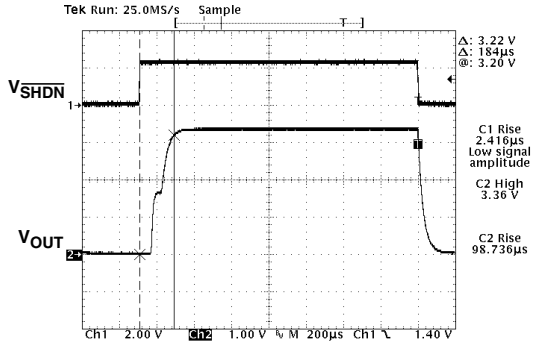

Measure Fall Time of 3.3V LDO

Conditions: C_{IN} = 1µF, C_{OUT} = 1µF, I_{LOAD} = 100mA, V_{IN} = 4.3V, Temp = 25°C, Fall Time = 52µS

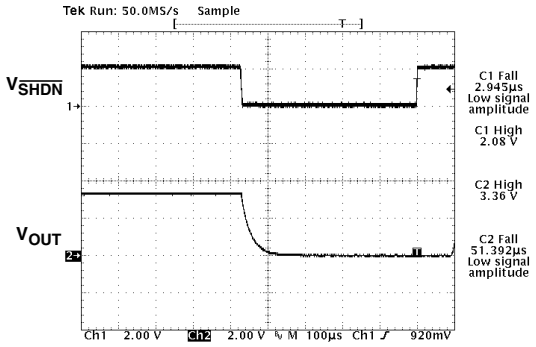

Measure Rise Time of 5.0V LDO

Conditions: C_{IN} = 1µF, C_{OUT} = 1µF, I_{LOAD} = 100mA, V_{IN} = 6V, Temp = 25°C, Fall Time = 192µS

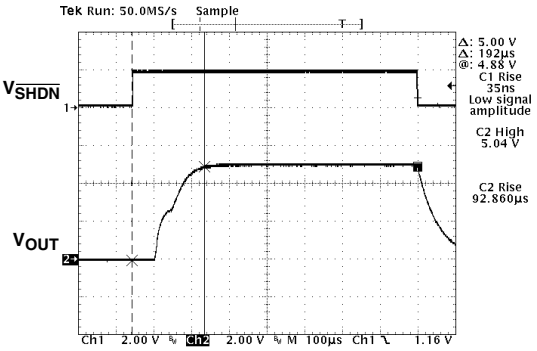

Measure Fall Time of 5.0V LDO

Conditions: C_{IN} = 1µF, C_{OUT} = 1µF, I_{LOAD} = 100mA, V_{IN} = 6V, Temp = 25°C, Fall Time = 88µS

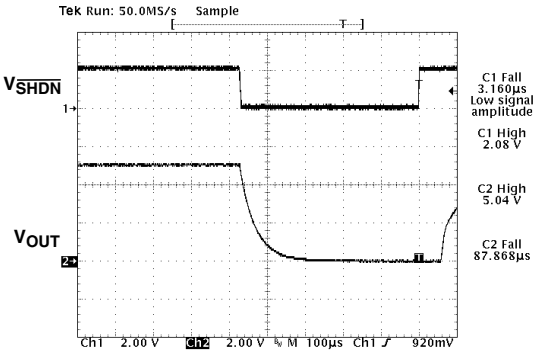

Thermal Shutdown Response of 5.0V LDO

Conditions: V_{IN} = 6V, C_{IN} = 0µF, C_{OUT} = 1µF

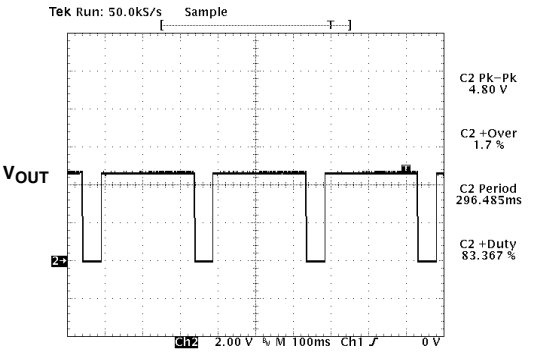

I_{LOAD} was increased until temperature of die reached about 160°C, at which time integrated thermal protection circuitry shuts the regulator off when die temperature exceeds approximately 160°C. The regulator remains off until die temperature drops to approximately 150°C.

© 2002 Microchip Technology Inc.

6.0 PACKAGING INFORMATION

6.1 Package Marking Information

“1” & “2” = part number code + temperature range and voltage

(V)	TC1223 Code	TC1224 Code
2.5	L1	M1
2.7	L2	M2
2.8	LZ	MZ
2.85	L8	M8
3.0	L3	M3
3.3	L5	M5
3.6	L9	M9
4.0	L0	M0
5.0	L7	M7

“3” represents year and quarter code

“4” represents lot ID number

6.2 Taping Form

Component Taping Orientation for 5-Pin SOT-23A (EIAJ SC-74A) Devices

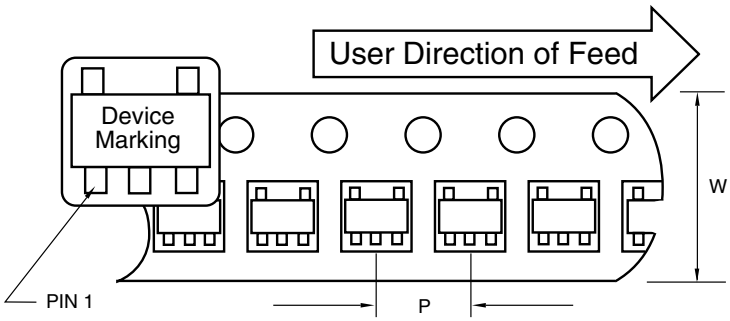

Standard Reel Component Orientation
TR Suffix Device
(Mark Right Side Up)

Carrier Tape, Number of Components Per Reel and Reel Size

Package	Carrier Width (W)	Pitch (P)	Part Per Full Reel	Reel Size
5-Pin SOT-23A	8 mm	4 mm	3000	7 in

6.3 Package Dimensions

SOT-23A-5

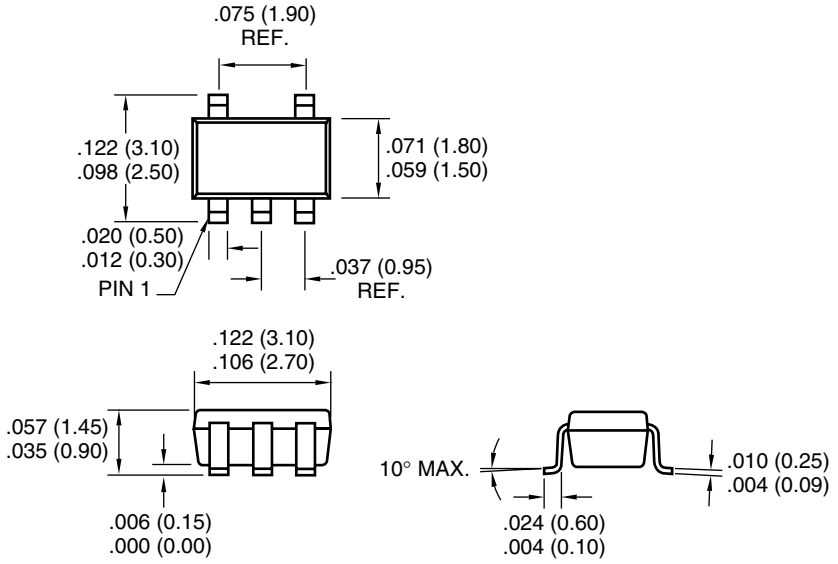

Dimensions: inches (mm)

© 2002 Microchip Technology Inc.

SALES AND SUPPORT

Data Sheets
Products supported by a preliminary Data Sheet may have an errata sheet describing minor operational differences and recommended workarounds. To determine if an errata sheet exists for a particular device, please contact one of the following:

1. Your local Microchip sales office
2. The Microchip Corporate Literature Center U.S. FAX: (480) 792-7277
3. The Microchip Worldwide Site (www.microchip.com)

Please specify which device, revision of silicon and Data Sheet (include Literature #) you are using.

New Customer Notification System
Register on our web site (www.microchip.com/cn) to receive the most current information on our products.

NOTES:

© 2002 Microchip Technology Inc.

Information contained in this publication regarding device applications and the like is intended through suggestion only and may be superseded by updates. It is your responsibility to ensure that your application meets with your specifications. No representation or warranty is given and no liability is assumed by Microchip Technology Incorporated with respect to the accuracy or use of such information, or infringement of patents or other intellectual property rights arising from such use or otherwise. Use of Microchip's products as critical components in life support systems is not authorized except with express written approval by Microchip. No licenses are conveyed, implicitly or otherwise, under any intellectual property rights.

Trademarks

The Microchip name and logo, the Microchip logo, FilterLab, KEELOQ, microID, MPLAB, PIC, PICmicro, PICMASTER, PICSTART, PRO MATE, SEEVAL and The Embedded Control Solutions Company are registered trademarks of Microchip Technology Incorporated in the U.S.A. and other countries.

dsPIC, ECONOMONITOR, FanSense, FlexROM, fuzzyLAB, In-Circuit Serial Programming, ICSP, ICEPIC, microPort, Migratable Memory, MPASM, MPLIB, MPLINK, MPSIM, MXDEV, MXLAB, PICC, PICDEM, PICDEM.net, rfPIC, Select Mode and Total Endurance are trademarks of Microchip Technology Incorporated in the U.S.A.

Serialized Quick Turn Programming (SQTP) is a service mark of Microchip Technology Incorporated in the U.S.A.

All other trademarks mentioned herein are property of their respective companies.

© 2002, Microchip Technology Incorporated, Printed in the U.S.A., All Rights Reserved.

Printed on recycled paper.

DNV Certification, Inc. USA

ANSI • RAB QMS ACCREDITED

DNV MSC The Netherlands Accredited by the RvA

DNV

ISO 9001 / QS-9000 REGISTERED FIRM

Microchip received QS-9000 quality system certification for its worldwide headquarters, design and wafer fabrication facilities in Chandler and Tempe, Arizona in July 1999 and Mountain View, California in March 2002. The Company's quality system processes and procedures are QS-9000 compliant for its PICmicro® 8-bit MCUs, KEELOQ® code hopping devices, Serial EEPROMs, microperipherals, non-volatile memory and analog products. In addition, Microchip's quality system for the design and manufacture of development systems is ISO 9001 certified.

WORLDWIDE SALES AND SERVICE

AMERICAS

Corporate Office
2355 West Chandler Blvd.
Chandler, AZ 85224-6199
Tel: 480-792-7200 Fax: 480-792-7277
Technical Support: 480-792-7627
Web Address: http://www.microchip.com

Rocky Mountain
2355 West Chandler Blvd.
Chandler, AZ 85224-6199
Tel: 480-792-7966 Fax: 480-792-7456

Atlanta
500 Sugar Mill Road, Suite 200B
Atlanta, GA 30350
Tel: 770-640-0034 Fax: 770-640-0307

Boston
2 Lan Drive, Suite 120
Westford, MA 01886
Tel: 978-692-3848 Fax: 978-692-3821

Chicago
333 Pierce Road, Suite 180
Itasca, IL 60143
Tel: 630-285-0071 Fax: 630-285-0075

Dallas
4570 Westgrove Drive, Suite 160
Addison, TX 75001
Tel: 972-818-7423 Fax: 972-818-2924

Detroit
Tri-Atria Office Building
32255 Northwestern Highway, Suite 190
Farmington Hills, MI 48334
Tel: 248-538-2250 Fax: 248-538-2260

Kokomo
2767 S. Albright Road
Kokomo, Indiana 46902
Tel: 765-864-8360 Fax: 765-864-8387

Los Angeles
18201 Von Karman, Suite 1090
Irvine, CA 92612
Tel: 949-263-1888 Fax: 949-263-1338

New York
150 Motor Parkway, Suite 202
Hauppauge, NY 11788
Tel: 631-273-5305 Fax: 631-273-5335

San Jose
Microchip Technology Inc.
2107 North First Street, Suite 590
San Jose, CA 95131
Tel: 408-436-7950 Fax: 408-436-7955

Toronto
6285 Northam Drive, Suite 108
Mississauga, Ontario L4V 1X5, Canada
Tel: 905-673-0699 Fax: 905-673-6509

ASIA/PACIFIC

Australia
Microchip Technology Australia Pty Ltd
Suite 22, 41 Rawson Street
Epping 2121, NSW
Australia
Tel: 61-2-9868-6733 Fax: 61-2-9868-6755

China - Beijing
Microchip Technology Consulting (Shanghai) Co., Ltd., Beijing Liaison Office
Unit 915
Bei Hai Wan Tai Bldg.
No. 6 Chaoyangmen Beidajie
Beijing, 100027, No. China
Tel: 86-10-85282100 Fax: 86-10-85282104

China - Chengdu
Microchip Technology Consulting (Shanghai) Co., Ltd., Chengdu Liaison Office
Rm. 2401, 24th Floor,
Ming Xing Financial Tower
No. 88 TIDU Street
Chengdu 610016, China
Tel: 86-28-86766200 Fax: 86-28-86766599

China - Fuzhou
Microchip Technology Consulting (Shanghai) Co., Ltd., Fuzhou Liaison Office
Unit 28F, World Trade Plaza
No. 71 Wusi Road
Fuzhou 350001, China
Tel: 86-591-7503506 Fax: 86-591-7503521

China - Shanghai
Microchip Technology Consulting (Shanghai) Co., Ltd.
Room 701, Bldg. B
Far East International Plaza
No. 317 Xian Xia Road
Shanghai, 200051
Tel: 86-21-6275-5700 Fax: 86-21-6275-5060

China - Shenzhen
Microchip Technology Consulting (Shanghai) Co., Ltd., Shenzhen Liaison Office
Rm. 1315, 13/F, Shenzhen Kerry Centre,
Renminnan Lu
Shenzhen 518001, China
Tel: 86-755-2350361 Fax: 86-755-2366086

China - Hong Kong SAR
Microchip Technology Hongkong Ltd.
Unit 901-6, Tower 2, Metroplaza
223 Hing Fong Road
Kwai Fong, N.T., Hong Kong
Tel: 852-2401-1200 Fax: 852-2401-3431

India
Microchip Technology Inc.
India Liaison Office
Divyasree Chambers
1 Floor, Wing A (A3/A4)
No. 11, O'Shaugnessey Road
Bangalore, 560 025, India
Tel: 91-80-2290061 Fax: 91-80-2290062

Japan
Microchip Technology Japan K.K.
Benex S-1 6F
3-18-20, Shinyokohama
Kohoku-Ku, Yokohama-shi
Kanagawa, 222-0033, Japan
Tel: 81-45-471- 6166 Fax: 81-45-471-6122

Korea
Microchip Technology Korea
168-1, Youngbo Bldg. 3 Floor
Samsung-Dong, Kangnam-Ku
Seoul, Korea 135-882
Tel: 82-2-554-7200 Fax: 82-2-558-5934

Singapore
Microchip Technology Singapore Pte Ltd.
200 Middle Road
#07-02 Prime Centre
Singapore, 188980
Tel: 65-6334-8870 Fax: 65-6334-8850

Taiwan
Microchip Technology Taiwan
11F-3, No. 207
Tung Hua North Road
Taipei, 105, Taiwan
Tel: 886-2-2717-7175 Fax: 886-2-2545-0139

EUROPE

Denmark
Microchip Technology Nordic ApS
Regus Business Centre
Lautrup hoj 1-3
Ballerup DK-2750 Denmark
Tel: 45 4420 9895 Fax: 45 4420 9910

France
Microchip Technology SARL
Parc d'Activite du Moulin de Massy
43 Rue du Saule Trapu
Batiment A - ler Etage
91300 Massy, France
Tel: 33-1-69-53-63-20 Fax: 33-1-69-30-90-79

Germany
Microchip Technology GmbH
Gustav-Heinemann Ring 125
D-81739 Munich, Germany
Tel: 49-89-627-144 0 Fax: 49-89-627-144-44

Italy
Microchip Technology SRL
Centro Direzionale Colleoni
Palazzo Taurus 1 V. Le Colleoni 1
20041 Agrate Brianza
Milan, Italy
Tel: 39-039-65791-1 Fax: 39-039-6899883

United Kingdom
Microchip Ltd.
505 Eskdale Road
Winnersh Triangle
Wokingham
Berkshire, England RG41 5TU
Tel: 44 118 921 5869 Fax: 44-118 921-5820

05/01/02

© 2002 Microchip Technology Inc.