STA5620

Fully integrated RF front-end for GPS

Preliminary Data

Features

- Low IF architecture ($f_{IF} = 4f_O$)
- Minimum external components
- VGA gain internally regulated
- On chip programmable PLL
- Typ. 2.7V supply voltage
- SPI interface
- 2kV HBM ESD protected
- Compatible with GPS L1
- Standard QFN-32 package
- Low power for portable designs

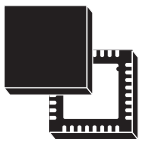

VFQFPN-32L

Description

The chip is a fully integrated RF front-end able to down-convert the GPS L1 signal from 1575.42MHz to 4.092MHz.

The IF signal is converted by a two bit ADC. Sign (SIGN), Magnitude (MAG) and the 16.368MHz sampling clock (GPS_CLK) are provided to the baseband.

The magnitude data is internally integrated in order to control the variable gain amplifiers in accordance to the RF input signal strength.

An excellent quality of reception in critical environments is ensured by the good noise figure and linearity of the receiver.

The on-chip oscillator supports crystal frequencies in the range of 10MHz to 40MHz. It is able to support TCXO providing also a buffered copy of the oscillator frequency.

The chip, using STMicroelectronics BiCMOS SiGe technology, is housed in a QFN-32 package.

Table 1. Device summary

Order code	Marking	Package	Packing
STA5620TR	STA5620	VFQFPN-32L	Tape & reel

This is preliminary information on a new product now in development or undergoing evaluation. Details are subject to change without notice.

www.st.com

Contents

1 Block diagram 6

2 Pins description 7

3 Functional description 9

3.1 RFA and MIXER section 9
3.2 IF section 9
3.3 Variable gain amplifiers 9
3.4 A/D converter 9
3.5 PLL synthesizer and VCO 10
3.6 Crystal oscillator 10
3.7 Output buffers 10
3.8 SPI interface 10
3.9 Power control modes 11

4 Electrical specifications 12

4.1 Absolute maximum ratings 12
4.2 Thermal data 12
4.3 Electrical characteristics 12

5 Pin and I/O cells 15

5.1 Mode 15
5.2 RF_EN 15
5.3 CHIP_EN 15
5.4 TEST_EN1, TEST_EN2 and TEST_CLK 15

6 SPI bus protocol 16

6.1 SPI_CS/ 16
6.2 SPI_CLK 16
6.3 SPI_DI 16
6.4 SPI_DO 16

7 Registers 17

7.1 Register map 17
7.2 PLL N Divider 17
7.3 PLL R Divider 17
7.4 Radio configuration register 18
7.5 Test register 18
7.6 Debug register (sub-circuit enables) 19
7.7 Radio trimming register 20
7.8 Receiver chain register (enable) 20

8 Chip enable and reset timing 21
8.1 Principle of operation 21
8.1.1 Operating modes 22
8.2 Default configuration 23

9 Package information 25

10 Packing information 26

11 Revision history 28

List of tables

Table 1. Device summary . . . 1
Table 2. Pins list description . . . 7
Table 3. Absolute maximum ratings . . . 12
Table 4. Thermal data . . . 12
Table 5. Electrical characteristics . . . 12
Table 6. Register map . . . 17
Table 7. PLL N divider . . . 17
Table 8. PLL R divider . . . 17
Table 9. Radio configuration register . . . 18
Table 10. Test register . . . 18
Table 11. Debug register (sub-circuit enables) . . . 19
Table 12. Radio trimming register . . . 20
Table 13. Receiver chain register (enable) . . . 20
Table 14. Operating modes . . . 22
Table 15. Default configuration . . . 23
Table 16. Document revision history . . . 28

List of figures

Figure 1. Block diagram 6
Figure 2. Pins connection diagram (bottom view) 8
Figure 3. SPI byte write 16
Figure 4. SPI byte read 16
Figure 5. Chip enable and reset timing 21
Figure 6. VFQFPN 32L (5x5x1.0mm) mechanical data and package dimensions 25
Figure 7. Reel, leader and trailer dimensions 26
Figure 8. Carrier tape requirements 27
Figure 9. Orientation 27

1 Block diagram

Figure 1. Block diagram

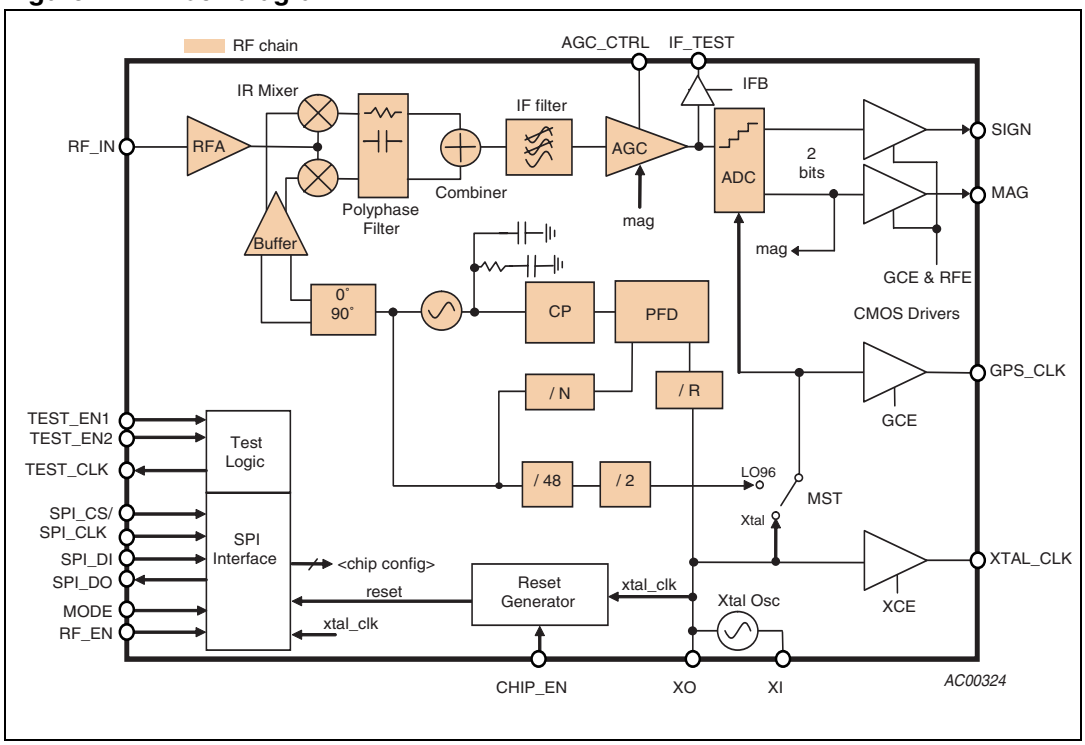

2 Pins description

Table 2. Pins list description

PIN	Symbol	Description	Type
1	V_{CC}	IF section power supply	Supply pin
2	AGC_CTRL	Automatic Gain Control Pin	Analog – input
3	V_{CC}	Mixer power supply	Supply pin
4	RF_IN	RF section input	Analog – RF input
5	V_{CC}	RF amplifier power supply	Supply pin
6	GND	Negative Supply Pin	Gnd
7	GND	Negative Supply Pin	Gnd
8	V_{CC}	Charge pump power supply	Supply pin
9	V_{CC}	Digital section power supply	Supply pin
10	V_{CC}	VCO power supply	Supply pin
11	V_{CC}	Crystal oscillator power supply	Supply pin
12	XTAL_IN	Input Side of Crystal Oscillator or TCXO Input	Analog – input
13	XTAL_OUT	Output Side of Crystal Oscillator	Analog – output
14	TEST_EN1	Test enable 1. Only for ST internal use	Digital – input
15	CHIP_EN	Chip Enable	Digital – input
16	RF_EN	RF/IF Receiver Chain Enable	Digital – input
17	MODE	Power-On Default Configuration Selector	Digital – input
18	XTAL_CLK	Crystal Oscillator Buffered Output	Digital – output
19	GPS_CLK	GPS Reference Clock	Digital – output
20	TEST_CLK	Test Clock. Only for ST internal use	Digital – output
21	TEST_EN2	Test enable 2. Only for ST internal use	Digital – input
22	SPI_DI	Serial Parallel Interface Data Input	Digital – input
23	SPI_CLK	Serial Parallel Interface Clock	Digital – input
24	SPI_CS/	Serial Parallel Interface Chip Select (Active Low)	Digital – input
25	SPI_DO	Serial Parallel Interface Data Output	Digital – output
26	MAG	Magnitude Data	Digital – output
27	SIGN	Sign Data	Digital – output
28	GND_IO	Output Drivers Ground	Gnd
29	V_{CC}_IO	I/Os power supply	Supply pin
30	V_{CC}	SPI power supply	Supply pin
31	V_{CC}	A/D converter power supply	Supply pin
32	IF_TEST	RF/IF Receiver Chain Test Output	Analog – output

Figure 2. Pins connection diagram (bottom view)

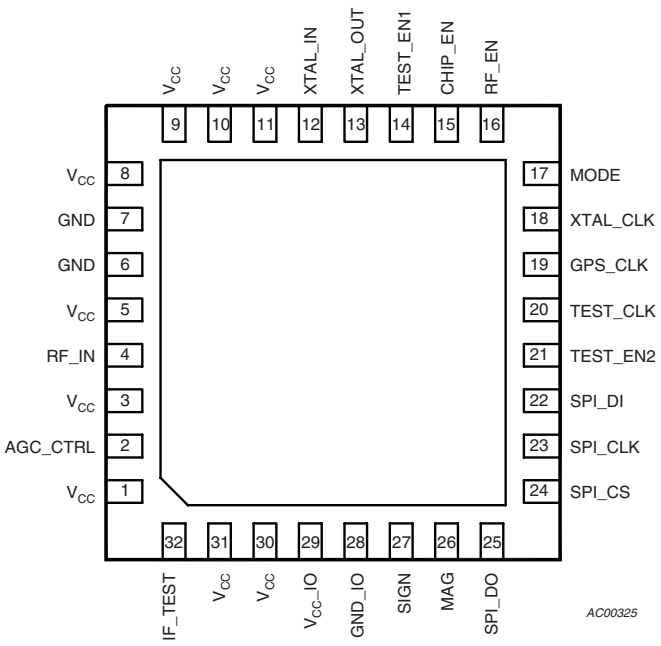

3 Functional description

3.1 RFA and MIXER section

The 1575.42 MHz RF signal at the output of the external SAW filter is amplified by a RF amplifier (RFA) and then down converted by an image rejection mixer.

The good performances of the cascade configuration and the technology choice guarantee a noise figure better than 4.5dB in typical conditions. In fact, the RFA gain is high enough to minimize the effects on the noise figure of the following integrated stages.

The linearity of the RFA and Mixer section ensures immunity to RF blockers close to the GPS signal. Then it allows the use of low quality external pre-selection filters.

Two ninety degrees out of phase signals are derived from the VCO and send to the input of the image rejection mixer. A minimum image rejection ratio of 20dB is guaranteed.

The chosen IF frequency is $4f_o$ = 4.092MHz.

3.2 IF section

The output of the mixer combiner is processed through an integrated filter able to select the GPS L1 bands. The IF filter cuts any out-of-band signal including the mixer products. In addition it acts as an anti-aliasing filter for the A/D converter. An attenuation of 20dB is guaranteed at $12f_o$ = 12.276 MHz.

The IF filter characteristic is calibrated by an internal loop which compensates process, temperature and voltage variations.

In order to let the baseband reconstruct the received information, the IF filter must not introduce an excessive phase shift within the signal bandwidth.

3.3 Variable gain amplifiers

A cascade of variable gain amplifiers and the relevant control circuit balance the system gain in relationship to the RF input signal strength. In that way the signal level at the input of the A/D converter is suitably compensated.

The device is able to self-adjust the AGC gain by integrating the MAG output by a dedicated circuit in order to obtain 33% of MAG bit duty cycle. The loop is compensated by an external capacitor connected to the AGC_CTRL pin. The relevant voltage is used to control the variable gain amplifiers.

The internal loop can be by-passed by setting a voltage to the AGC_CTRL input pin. A dynamic range of around 55dB is typically achieved.

3.4 A/D converter

The task of the A/D converter is to determine the sign and the magnitude of the received signal. The A/D converter sampling frequency is $16f_o$ = 16.368 MHz.

Those baseband chips with just one bit input will use only the sign bit. In that case the AGC_CTRL pin must be connected to ground.

3.5 PLL synthesizer and VCO

The PLL synthesizer is fully integrated on-chip, it is made by the voltage controlled oscillator (VCO), prescaler, dividers, phase-frequency detector (PFD), charge pump (CP) and loop filter. Both the reference divider R and the feedback divider N are programmable helping the user to choose the reference clock. The R divider ranges from 1 to 63 while the N divider from 56 to 4095.

In order to achieve good phase noise performances, a LC voltage controlled oscillator has been chosen. Quadrature signals are provided by means of a Polyphase filter.

A programmable loop filter is integrated on-chip to reduce the number of external components. The loop stability is guaranteed for any of the supported crystals and comparison frequencies.

The charge pump is programmable and the output current can be selected among the following values: 50µA, 100µA, 150µA and 200µA.

3.6 Crystal oscillator

The reference oscillator circuit is a CMOS inverter able to work with external crystals up to 40 MHz. The crystal must be connected between the xtal input and the xtal output pins. The load capacitances must be chosen in accordance to the values specified by the crystal manufacturer. A limiting resistor can be placed at the output of the inverter in order to contain the power dissipated in the crystal within its specified maximum value.

When a TCXO is used the external reference clock must be applied to the XTAL_IN terminal.

3.7 Output buffers

The RF front-end provides a set of four different signals to the baseband chip.

The SIGN and the MAG outputs are the sampled bit streams of the down-converted received signal.

GPS_CLK, nominally equal to 16.368 MHz, is the clock signal used by the baseband. Its source can be chosen among the crystal oscillator signal and the VCO signal by means of a 96 divider.

XTAL_CLK is the buffered copy of either the crystal oscillator or the TCXO signal.

In order to let the application find the best compromise between electro-magnetic interferences and the drivers speed, the output stages slew-rate can be programmed by SPI.

3.8 SPI interface

A SPI interface manages the communication between the baseband chip and the RF front-end. Four lines are required to accomplish this task: a data input line (SPI_DI), a data output line (SPI_DO), a clock line (SPI_CLK) and a chip select line (SPI_CS/) active low.

Any information can be passed to the RF receiver through the SPI interface depending on the CHIP_EN and RF_EN input pins status.

3.9 Power control modes

Three different power control modes can be chosen by means of the CHIP_EN and the RF_EN pins. If the CHIP_EN pin is forced low the device goes to stand-by mode with very low power consumption. On the other hand, if CHIP_EN is set high, two scenarios are possible:

1. IIf RF_EN = 0 the crystal oscillator and only one output buffer are enabled, XTAL_CLK if MODE = 1 or GPS_CLK if MODE = 0;
2. If RF_EN = 1 the whole chip is active and functional. Only if MODE = 0 the XTAL_CLK output is disabled.

A logic reset of the SPI registers is generated by the low to high transitions of the CHIP_EN pin. External pin strapping dominates until some SPI commands reverse the priority and overrides the strapping until next reset.

4 Electrical specifications

4.1 Absolute maximum ratings

Table 3. Absolute maximum ratings

Symbol	Parameter	Min	Max	Unit
V_{CC}	All supply voltages	-0.3	3.6	V
T_J	Junction operating temperature	-40	125	°C
T_S	Storage temperature	-65	150	°C
ESD_{HBM}	Electro static discharge – Human body model	-	2	kV
ESD_{MM}	Electro static discharge – Machine model	-	200	V
ESD_{CDM}	Electro static discharge - Charged device model	-	750	V

4.2 Thermal data

Table 4. Thermal data

Symbol	Parameter	Value	Unit
T_{amb}	Ambient operating temperature	-40 to 85	°C
$R_{th\ j\text{-}amb}$	Thermal resistance junction to ambient	40	°C/W

4.3 Electrical characteristics

Table 5. Electrical characteristics

(V_{CC} = 2.7V, T_J = 25°C unless otherwise noted)

Symbol	Parameter	Test conditions	Min	Typ	Max	Unit
Supply						
V_{CC}	Analog, Digital		2.56	2.7	3.3	V
Vcc_IO	I/O supply		1.7		3.3	V
I_{CC}	Total power consumption	Internal blocks ON		15	19	mA
I_{CC_CLK}	Clock only power consumption	Crystal oscillator ON		1.5	1.8	mA
I_{CC_STB}	Stand-by power consumption	Internal blocks OFF		1		µA
RFA – MIXER – IF FILTER – VGA						
f_{IN}	RFA Input frequency			1575.42		MHz
f_{IF}	IF frequency			4.092		MHz
G_C	Conversion gain	VGA at max gain		105		dB
		VGA at min gain		50		

Table 5. Electrical characteristics (continued)
(V_{CC} = 2.7V, T_J = 25°C unless otherwise noted)

Symbol	Parameter	Test conditions	Min	Typ	Max	Unit
ΔG_C	VGA range	Set V_{AGC_CTRL} < 0.3V for maximum gain		55		dB
V_{AGC_CTRL}	AGC Control Voltage Range		0		Vcc	V
G_{SENS}	VGA sensitivity				36	dB/V
$NF_{_RF\text{-}IF}$	RF-IF-VGA noise figure	f = 4.092MHz VGA at max gain		4.5		dB
$P_{_1dB}$	RF-IF-VGA 1dB input compression point	VGA at min gain		-57		dBm
IRR	Mixer image rejection ratio	f = 2 to 6 MHz		20		dB
IFF_{3dB}	IF filter cut-off frequency			6		MHz
IFF_{ATT}	IF filter out of band attenuation	f = 12.276MHz	20			dB
$VSWR_{IN}$	RFA Input voltage stat. wave ratio	Z_S=50Ω			2:1	-
Crystal oscillator – Integer-N synthesizer – VCO						
F_{XTAL}	XTAL frequency		10		40	MHz
$t_{START\text{-}UP}$	XTAL oscillator start-up time				10	msec
P_{XTAL_IN}	Reference input signal sensitivity	XTAL_IN pin DC blocked. No crystal mounted. XTAL_OUT load <10pF.		-20		dBm
R_{DIV}	Reference divider range		1		63	-
F_{LO}	LO operating frequency			1571.328		MHz
N_{DIV}	VCO divider range		56		4095	-
K_V (1)	VCO gain	f = 1571.328 MHz		300		MHz/V
PN_{VCO}(1)	VCO phase noise	100 kHz offset			-80	dBc/Hz
PN_{PLL}	PLL phase noise	1 kHz offset		-65		dBc/Hz
I_{CP}(1)	Charge pump current		50		200	µA
ΔI_{CP}(1)	Charge pump current steps			50		µA
ADC – Output signals – GPS clock						
f_{ADC}	ADC sampling frequency			16.368		MHz
τ_{MAG}	MAG duty cycle	Internally regulated		33		%
τ_{SIGN}	SIGN duty cycle			50		%
f_{CLOCK}	Output clock frequency			16.368		MHz
τ_{CLOCK}	Output clock duty cycle			50		%

Table 5. Electrical characteristics (continued)
(V_{CC} = 2.7V, T_J = 25°C unless otherwise noted)

Symbol	Parameter	Test conditions	Min	Typ	Max	Unit
Input and output buffers						
V_{IH}	CMOS input high level		$0.8 \cdot V_{CC}$			V
V_{IL}	CMOS input high level				$0.2 \cdot V_{CC}$	V
C_{IN}	CMOS input capacitance				1	pF
V_{OH}	CMOS output high level		$0.9 \cdot V_{CC}$			V
V_{OL}	CMOS output low level				$0.1 \cdot V_{CC}$	V
t_{RISE}(2)	CMOS output rise time	C_L=10pF, from 10% to 90% Slew-rate = fast			3	ns
		C_L=10pF, from 10% to 90% Slew-rate = slow			6	ns
t_{FALL}(2)	CMOS output fall time	C_L=10pF, from 10% to 90% Slew-rate = fast			3	ns
		C_L=10pF, from 10% to 90% Slew-rate = slow			6	ns

1. This value is guaranteed by design.
2. Simulation data.

5 Pin and I/O cells

5.1 Mode

This pin allows a choice of initial configuration of the registers at reset. This pin will always be an input. In application this pin will be connected either LO or HI.

When it is low the chip is configured to use 16.368MHz as reference frequency, otherwise the reference frequency is 19.2MHz. To use other reference frequencies the MODE bit must be overwritten by SPI.

5.2 RF_EN

This pin provides control over the operating state of the RF and PLL sections. When it is low those blocks are off, when high the status of the blocks depends of CHIP_EN. This pin will always be an input.

5.3 CHIP_EN

This pin provides control over the operating state of the chip. When it is low the entire chip is disabled and only a leakage current is present (< 10µA). On the rising edge it provides the SPI with a reset signal, the SPI default status depends on MODE and RF_EN pins status. When it is high the entire chip is enabled. This pin will always be an input.

5.4 TEST_EN1, TEST_EN2 and TEST_CLK

Those PINs are for ST test only. In the application TEST_EN1 must be set LOW, TEST_EN2 must be set HIGH (V_{CC}_IO) and TEST_CLK must be not connected.

6 SPI bus protocol

The SPI port is used for data exchange between STA5620 and a GPS base band. The SPI port is controlled by four pins SPI_CLK, SPI_DI, SPI_DO and SPI_CS/. These pins are inputs only, except for SPI_DO, the data output. The SPI Bus protocol is based on a 2-phase transfer made of an address cycle and a data cycle.
The two functions in the bus interface layer are:

Figure 3. SPI byte write

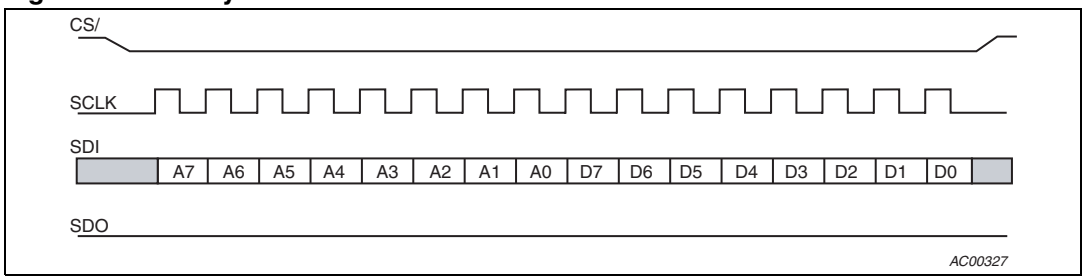

Figure 4. SPI byte read

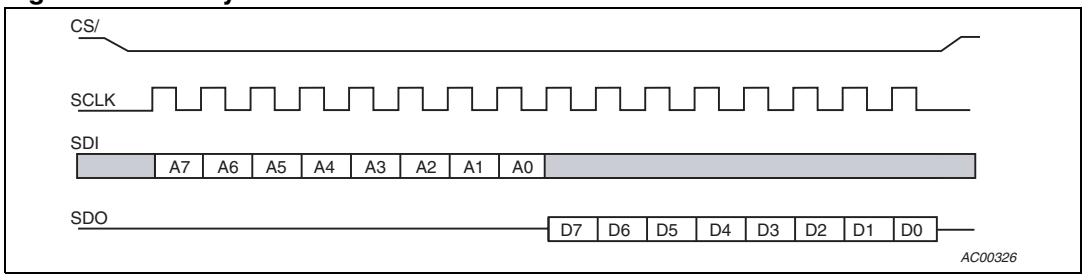

6.1 SPI_CS/

This package pin provides the frame and CS/ connection for the serial interface (SPI). This pin will always be an input.

6.2 SPI_CLK

This package pin provides the clock connection for the serial interface (SPI). This pin will always be an input.

6.3 SPI_DI

This package pin provides the data input connection for the serial interface (SPI). This pin will always be an input.

6.4 SPI_DO

This package pin provides the data output connection for the serial interface (SPI). This pin will always be an output.

7 Registers

7.1 Register map

Table 6. Register map

Address R/W	Bit	7	6	5	4	3	2	1	0
0xC0/40		-	-	-	-	---------- NDIV[11:8] ----------			
0xC1/41		---------- NDIV[7:0] ----------							
0xC2/42		-	-	---------- RDIV[5:0] ----------					
0xC3/43		Reserved				GCE	XCE	LSR	MST
0xD0/50		-	Reserved						IFB
0xD1/51		ENM	Reserved	AGC	IF	MIX	RFA	PLL	VCO
0xD2/52		-	-	-	---------- LFC[2:0] ----------			----- CPI[1,0] -----	
0xE0/60		RFE	-	Reserved					

7.2 PLL N Divider

Table 7. PLL N divider

Register address	Name	Bit	Default value MODE = 0 (decimal)	Default value MODE = 1 (decimal)	Description
0x40	NDIV	XXXX nnnn [0:3]	96	1555	PLL Feedback Divider Division Ratio
0x41		nnnn nnnn [0:7]			

7.3 PLL R Divider

Table 8. PLL R divider

Register address	Name	Bit	Default value MODE = 0 (decimal)	Default value MODE = 1 (decimal)	Description
0x42	RDIV	XXrr rrrr [0:5]	1	19	Reference Divider Division Ratio

Note that registers 40, 41 and 42 are delivered on a single 24 bit bus. New register values are delivered synchronously to the bus only after register 42 is written.

7.4 Radio configuration register

Table 9. Radio configuration register

Register address	Name	Bit	Default value MODE = 0	Default value MODE = 1	Description
0x43	MST	XXXX XXX y [0]	0	1	**MST** = 0 GPS_CLK output equal to Xtal
					MST = 1 GPS_CLK output equal to LO96
	LSR	XXXX XX y X [1]	1	1	**LSR** = 0 slow slew rate mode not active
					LSR = 1 slow slew rate mode active
	XCE	XXXX X y XX [2]	0	1	**XCE** = 0 XTAL_CLK buffer is OFF
					XCE = 1 XTAL_CLK buffer is ON
	GCE	XXXX y XXX [3]	1	1	**GCE** = 0 GPS_CLK buffer is OFF
					GCE = 1 GPS_CLK buffer is ON

7.5 Test register

Table 10. Test register

Register address	Name	Bit	Default value MODE = 0	Default value MODE = 1	Description
0x50	IFB	XXXX XXX y [1]	0	0	**IFB** = 0 The IF Buffer is OFF
					IFB = 1 The IF Buffer is ON

7.6 Debug register (sub-circuit enables)

Table 11. Debug register (sub-circuit enables)

Register address	Name	Bit	Default value MODE = 0	Default value MODE = 1	Description
0x51	VCO	XXXX XXX y [0]	1	1	**VCO** = 0 The VCO block is OFF
					VCO = 1 The VCO block is ON
	PLL	XXXX XX y X [1]	1	1	**PLL** = 0 The PLL block is OFF
					PLL = 1 The PLL block is ON
	RFA	XXXX X y XX [2]	1	1	**RFA** = 0 The RF Amplifier is OFF
					RFA = 1 The RF Amplifier is ON
	MIX	XXXX y XXX [3]	1	1	**MIX** = 0 The Mixer is OFF
					MIX = 1 The Mixer is ON
	IF	XXX y XXXX [4]	1	1	**IF** = 0 The IF chain from Polyphase filter to ADC is OFF
					IF = 1 The IF chain from Polyphase filter to ADC is ON
	AGC	XX y X XXXX [5]	1	1	**AGC** = 0 The Automatic Gain Control is OFF
					AGC = 1 The Automatic Gain Control is ON
	ENM	y XXX XXXX [7]	1	1	**ENM** = 0 The whole chip is OFF except the Xtal Osc and the GPS_CLK and/or XTAL_CLK buffers
					ENM = 1 RF chain is On (If RFE bit or RF_EN pin = 1)

7.7 Radio trimming register

Table 12. Radio trimming register

Register address	Name	Bit	Default value MODE = 0	Default value MODE = 1	Description
0x52	CPI	XXXX XX yy [0:1]	11	11	**CPI** = 00 50µA charge pump current
					CPI = 01 100µA charge pump current
					CPI = 10 150µA charge pump current
					CPI = 11 200µA charge pump current
	LFC	XXXy yyXX [2:4]	110	110	Loop filter control

7.8 Receiver chain register (enable)

Table 13. Receiver chain register (enable)

Register address	Name	Bit	Default value MODE = 0	Default value MODE = 1	Description
0x60	RFE	XXXX XXX y [0]	0	0	**RFE** = 0 The RF chain is controlled by RF_EN pin
					RFE = 1 The RF chain is ON

8 Chip enable and reset timing

Figure 5. Chip enable and reset timing

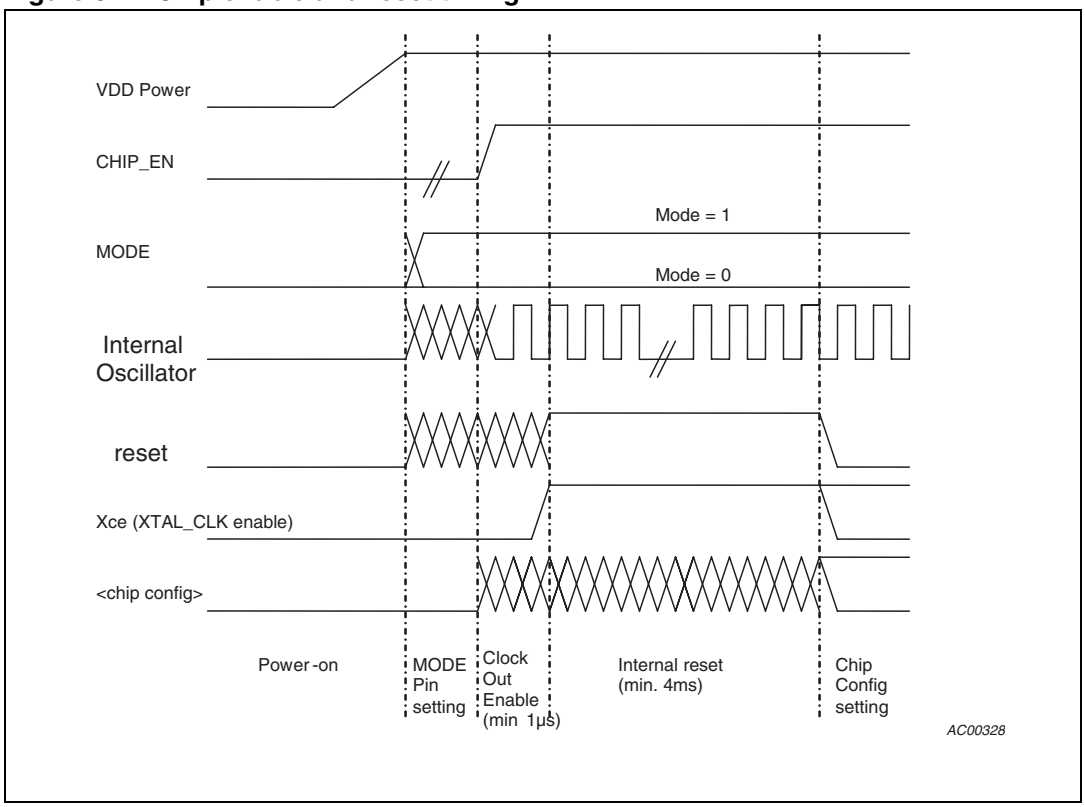

8.1 Principle of operation

With power supply applied and CHIP_EN inactive the chip is in stand-by mode consuming just a minimal leakage current (<10µA). Applying CHIP_EN High turns-on the chip and starts the Crystal oscillator. Two internal counters driven by the Oscillator output are used to create two timing periods to:

- The first time period (Clock Out Enable) is long enough to safely enable XTAL_CLK as early as possible by default during oscillator startup.
- The second period (Internal reset) generates an internal reset pulse long enough to guarantee open-loop clock stabilization (driven either by internal oscillator or by off-chip TCXO) and be able to load the chip default configuration.

The default initial configurations depend on the state of the MODE input pin. After this phase, the chip configuration may be modified by the baseband unit with a set of SPI commands, allowing a more specific configuration to be set

8.1.1 Operating modes

The below table shows how select a particular default operating mode:

Table 14. Operating modes

Operating modes		STA5620 current consumption	CHIP_EN	RF_EN	TEST_EN1	TEST_EN2
Fully operating	MODE = 0	15mA	HIGH	HIGH	LOW	HIGH
	MODE = 1	16mA				
RF Chain OFF Crystal oscillator ON		1.5mA	HIGH	LOW	LOW	HIGH
Stand-by All internal blocks OFF		1µA	LOW	x	LOW	HIGH

HIGH = VCC_IO; LOW = GND

MODE

LOW → sets the STA5620 internal dividers to work with 16.368 MHz reference and GPS_CLK = ON and XTAL_CLK = OFF;

HIGH → sets the STA5620 internal dividers to work with 19.2 MHz reference and GPS_CLK = ON and XTAL_CLK = ON;

In both cases GPS_CLK pin provides 16.368MHz clock to Base Band and SIGN pin provides the DATA to Base Band.

CHIP_EN

LOW → the device goes to stand-by mode with very low power consumption.

HIGH → sets ON the internal blocks of the IC according to the RF_EN status;

A logic reset of the SPI registers is generated by the low to high transitions of the CHIP_EN pin while the RF_EN is LOW.

RF_EN

LOW → the crystal oscillator and only one output buffer are enabled, XTAL_CLK if MODE = 1 or GPS_CLK if MODE = 0;

HIGH → the whole chip is active and functional;

TEST_EN1 → must be set LOW;

TEST_EN2 → 'must be set HIGH (VCC_IO);

8.2 Default configuration

This table describes the default configuration of the STA5620 internal registers.

Table 15. Default configuration

Bit Name	Description	Values	(MODE_EN=0)	(MODE_EN=1)
Sample mode configuration				
MST	Sample clock Source Selector	0 = Xtal Osc 1 = VCO/96,	0	1
	Default xtal/TCXO frequency		16.368MHz	19.200MHz
Power enable configuration				
ENM	RF Chain Enable (From the RFA Input to the AGC Output)	0 = RF chain OFF, 1 = RF chain On If RFE bit or RF_EN pin = 1	1	1
RFE	RF Chain Enable (From the RFA Input to the AGC Output)	0 = controlled by RF_EN pin, 1 = RF chain On	0	0
GCE	GPS Clock Enable	0 = GPS clock Off, 1 = GPS clock On	1	1
AGC	Automatic Control Gain Enable	0 = AGC function Off, 1 = AGC function On	1	1
XCE	Xtal Clock Enable	0 = Off, 1 = On	0	1
IFB	IF Output Buffer Enable	0 = Off, 1 = On	0	0
VCO	Voltage Controlled Oscillator Enable	0 = Off, 1 = On	1	1
IF	IF enable	0 = Off, 1 = On	1	1
MIX	Mixer enable	0 = Off, 1 = On	1	1
RFA	RF Amplifier enable	0 = Off, 1 = On	1	1
PLL	Phase Locked Loop Enable (Dividers, PFD, Charge Pump).	0 = Off, 1 = On	1	1

Table 15. Default configuration (continued)

Bit Name	Description	Values	(MODE_EN=0)	(MODE_EN=1)
Divider configuration				
NDIV[11:0]	PLL Feedback Divider Division Ratio (mapped as 2 byte registers)	56 to 4095	96	1555
RDIV[5:0]	Reference Divider Division Ratio (write of this register updates all of the ndiv, rdiv vector)	1 to 63	1	19
Charge pump current selector				
CPI[1:0]	Charge Pump Current Selector	00 = 50µA 01 = 100µA 10 = 150µA 11 = 200µA	11	11
Output slew rate control				
LSR	XTAL_CLK, GPS_CLK,TEST_CLK, SPI_DO, SIGN and MAG Output Drivers Slew Rate	0 = Fast 1 = Slow	1	1

Note: Disabling a digital output buffer means driving it low.

9 Package information

In order to meet environmental requirements, ST offers these devices in ECOPACK® packages. These packages have a Lead-free second level interconnect. The category of second Level Interconnect is marked on the package and on the inner box label, in compliance with JEDEC Standard JESD97. The maximum ratings related to soldering conditions are also marked on the inner box label. ECOPACK is an ST trademark. ECOPACK specifications are available at: www.st.com.

Figure 6. VFQFPN 32L (5x5x1.0mm) mechanical data and package dimensions

DIM.	mm			inch		
	MIN.	TYP.	MAX.	MIN.	TYP.	MAX.
A	0.800	0.900	1.000	0.031	0.035	0.039
A	0.800	0.900	1.000	0.0315	0.0354	0.0394
A1		0.020	0.050		0.0008	0.0020
A3		0.200			0.0079	
b	0.180	0.250	0.300	0.0071	0.0098	0.0118
D	4.850	5.000	5.150	0.1909	0.1969	0.2028
D2	3.500	3.600	3.700	0.1378	0.1417	0.1457
E	4.850	5.000	5.150	0.1909	0.1969	0.2028
E2	3.500	3.600	3.700	0.1378	0.1417	0.1457
e		0.500			0.0197	
L	0.300	0.400	0.500	0.0118	0.0157	0.0197
ddd			0.050			0.0020

OUTLINE AND MECHANICAL DATA

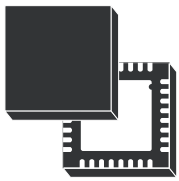

VFQFPN32 (5x5x1.0mm)
Very **F**ine **Q**uad **F**lat **P**ackage **N**o lead

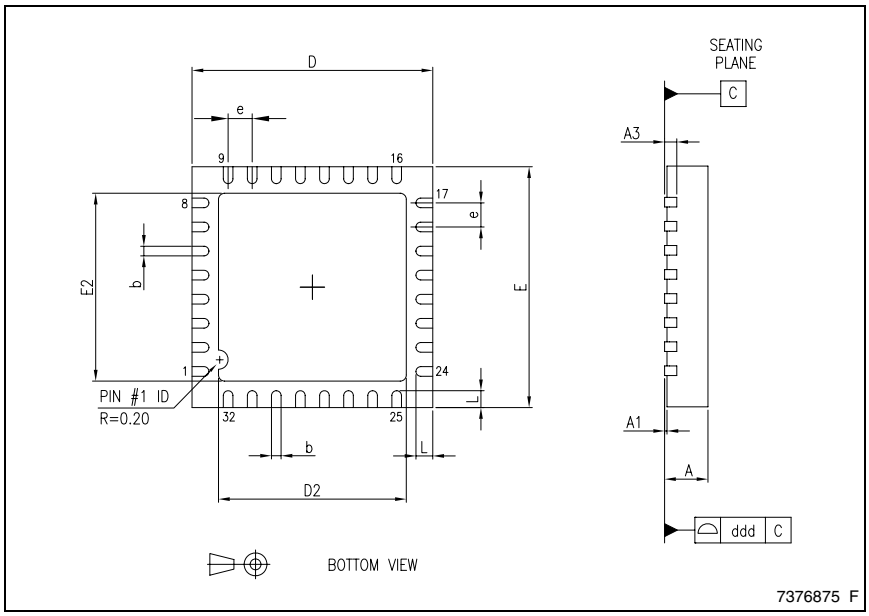

10 Packing information

Figure 7. Reel, leader and trailer dimensions

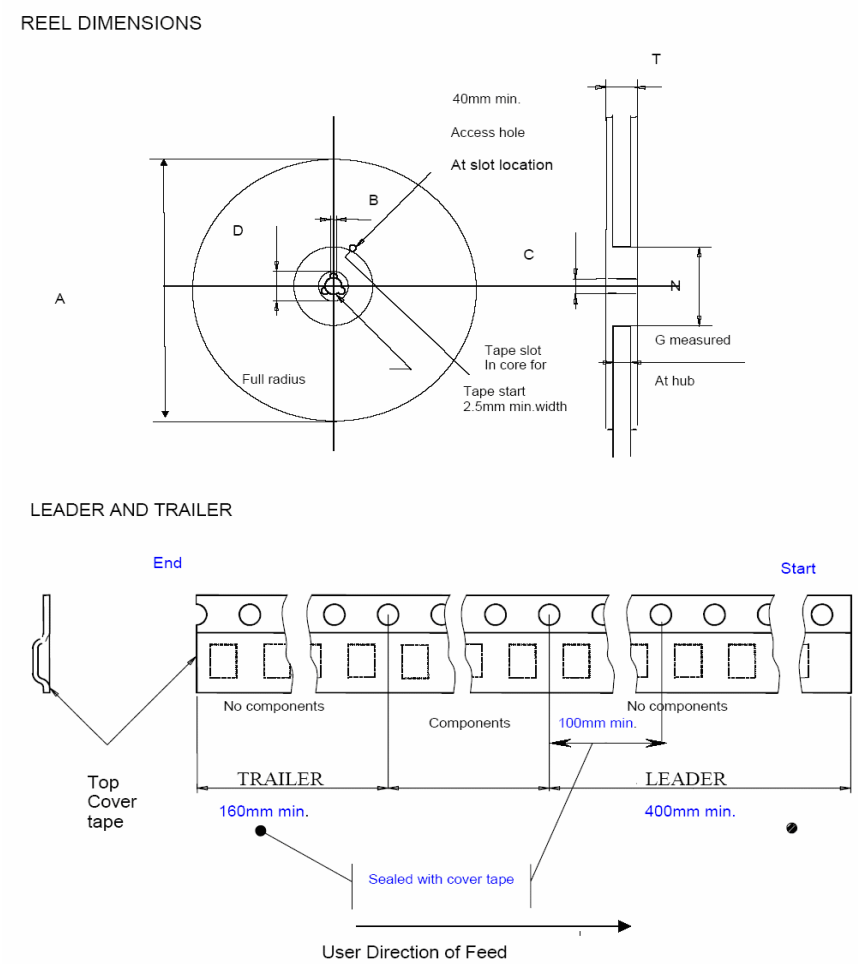

Tape sizes	A max	B min	C	D min	N min	G	T max
12mm	330	1.5	13 ±0.2	20.2	60	12.4 +2/-0	18.4

Figure 8. Carrier tape requirements

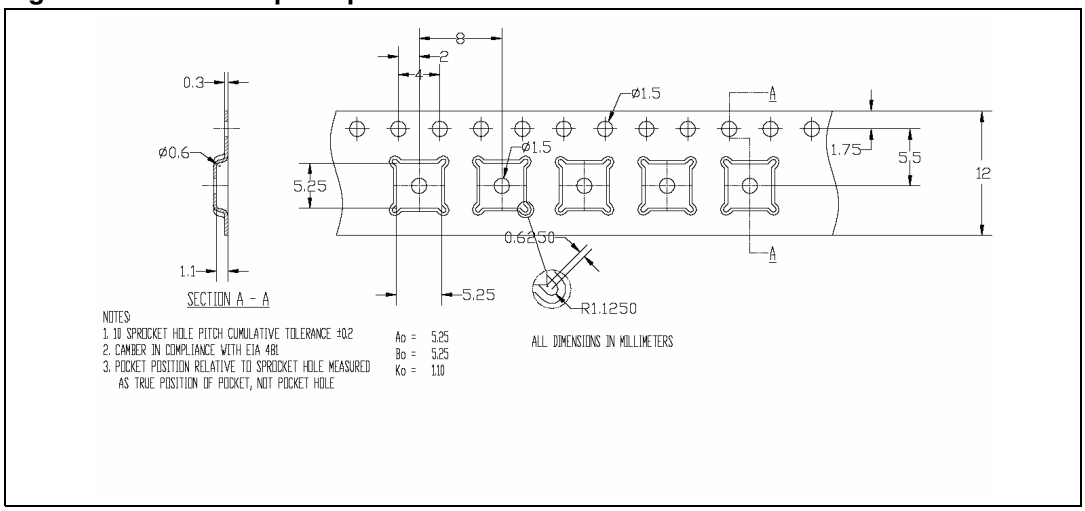

Figure 9. Orientation

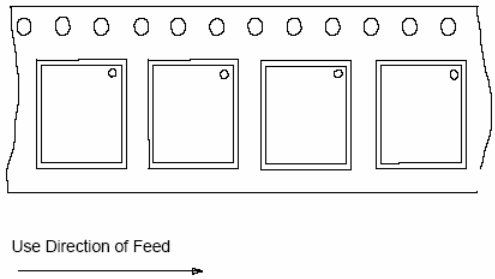

11 Revision history

Table 16. Document revision history

Date	Revision	Changes
24-Jul-2007	1	Initial release.

Please Read Carefully:

Information in this document is provided solely in connection with ST products. STMicroelectronics NV and its subsidiaries (“ST”) reserve the right to make changes, corrections, modifications or improvements, to this document, and the products and services described herein at any time, without notice.

All ST products are sold pursuant to ST’s terms and conditions of sale.

Purchasers are solely responsible for the choice, selection and use of the ST products and services described herein, and ST assumes no liability whatsoever relating to the choice, selection or use of the ST products and services described herein.

No license, express or implied, by estoppel or otherwise, to any intellectual property rights is granted under this document. If any part of this document refers to any third party products or services it shall not be deemed a license grant by ST for the use of such third party products or services, or any intellectual property contained therein or considered as a warranty covering the use in any manner whatsoever of such third party products or services or any intellectual property contained therein.

UNLESS OTHERWISE SET FORTH IN ST’S TERMS AND CONDITIONS OF SALE ST DISCLAIMS ANY EXPRESS OR IMPLIED WARRANTY WITH RESPECT TO THE USE AND/OR SALE OF ST PRODUCTS INCLUDING WITHOUT LIMITATION IMPLIED WARRANTIES OF MERCHANTABILITY, FITNESS FOR A PARTICULAR PURPOSE (AND THEIR EQUIVALENTS UNDER THE LAWS OF ANY JURISDICTION), OR INFRINGEMENT OF ANY PATENT, COPYRIGHT OR OTHER INTELLECTUAL PROPERTY RIGHT.

UNLESS EXPRESSLY APPROVED IN WRITING BY AN AUTHORIZED ST REPRESENTATIVE, ST PRODUCTS ARE NOT RECOMMENDED, AUTHORIZED OR WARRANTED FOR USE IN MILITARY, AIR CRAFT, SPACE, LIFE SAVING, OR LIFE SUSTAINING APPLICATIONS, NOR IN PRODUCTS OR SYSTEMS WHERE FAILURE OR MALFUNCTION MAY RESULT IN PERSONAL INJURY, DEATH, OR SEVERE PROPERTY OR ENVIRONMENTAL DAMAGE. ST PRODUCTS WHICH ARE NOT SPECIFIED AS "AUTOMOTIVE GRADE" MAY ONLY BE USED IN AUTOMOTIVE APPLICATIONS AT USER’S OWN RISK.

Resale of ST products with provisions different from the statements and/or technical features set forth in this document shall immediately void any warranty granted by ST for the ST product or service described herein and shall not create or extend in any manner whatsoever, any liability of ST.

ST and the ST logo are trademarks or registered trademarks of ST in various countries.

Information in this document supersedes and replaces all information previously supplied.

The ST logo is a registered trademark of STMicroelectronics. All other names are the property of their respective owners.

© 2007 STMicroelectronics - All rights reserved

STMicroelectronics group of companies

Australia - Belgium - Brazil - Canada - China - Czech Republic - Finland - France - Germany - Hong Kong - India - Israel - Italy - Japan - Malaysia - Malta - Morocco - Singapore - Spain - Sweden - Switzerland - United Kingdom - United States of America

www.st.com