SGS-THOMSON MICROELECTRONICS

M54/74HC373
M54/74HC533

OCTAL D-TYPE LATCH WITH 3 STATE OUTPUT
HC373 NON INVERTING - HC533 INVERTING

- HIGH SPEED
  t_{PD} = 11 ns (TYP.) AT V_{CC} = 5 V
- LOW POWER DISSIPATION
  I_{CC} = 4 µA (MAX.) AT T_A = 25 °C
- HIGH NOISE IMMUNITY
  $V_{NIH} = V_{NIL}$ = 28 % V_{CC} (MIN.)
- OUTPUT DRIVE CAPABILITY
  15 LSTTL LOADS
- SYMMETRICAL OUTPUT IMPEDANCE
  $I_{OL} = |I_{OH}|$ = 6 mA (MIN.)
- BALANCED PROPAGATION DELAYS
  $t_{PLH} = t_{PHL}$
- WIDE OPERATING VOLTAGE RANGE
  V_{CC} (OPR) = 2 V TO 6 V
- PIN AND FUNCTION COMPATIBLE
  WITH 54/74LS373/533

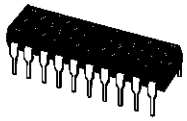

B1R
(Plastic Package)

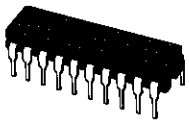

F1R
(Ceramic Package)

M1R
(Micro Package)

C1R
(Chip Carrier)

ORDER CODES :

M54HCXXXF1R	M74HCXXXM1R
M74HCXXXB1R	M74HCXXXC1R

DESCRIPTION

The M54/74HC373/533 are high speed CMOS OCTAL LATCH WITH 3-STATE OUTPUTS fabricated with in silicon gate C^2MOS technology.

These ICs achive the high speed operation similar to equivalent LSTTL while maintaning the CMOS low power dissipation.

These 8 bit D-Type latches are controlled by a latch enable input (LE) and a output enable input ($\overline{OE}$).

While the LE input is held at a high level, the Q outputs will follow the data input precisely or inversely. When the LE is taken low, the Q outputs will be latched precisely or inversely at the logic level of D input data. While the $\overline{OE}$ input is at low level, the eight outputs will be in a normal logic state (high or low logic level) and while high level the outpts will be in a high impedance state.

The application designer has a choise of combination of inverting and non inverting outputs.

The three state output configuration and the wide choise of outline make bus organized system simple.

All inputs are equipped with protection circuits against discharge and transient excess voltage.

PIN CONNECTION (top view)

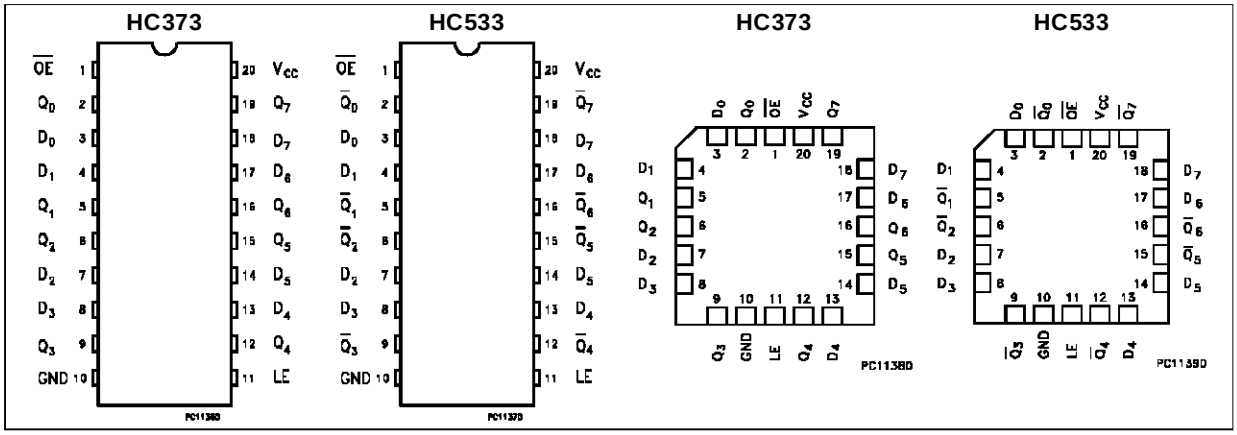

INPUT AND OUTPUT EQUIVALENT CIRCUIT

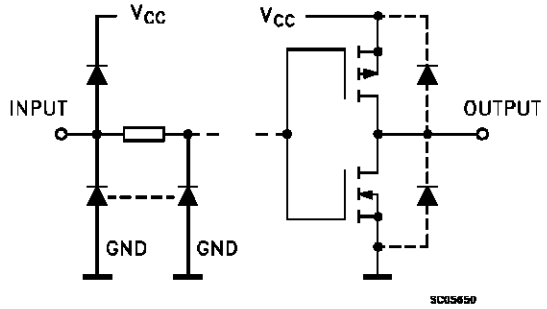

PIN DESCRIPTION (HC373)

PIN No	SYMBOL	NAME AND FUNCTION
1	$\overline{OE}$	3 State output Enable Input (Active LOW)
2, 5, 6, 9, 12, 15, 16, 19	Q0 to Q7	3 State outputs
3, 4, 7, 8, 13, 14, 17, 18	D0 to D7	Data Inputs
11	LE	Latch Enable Input
10	GND	Ground (0V)
20	V_{CC}	Positive Supply Voltage

PIN DESCRIPTION (HC533)

PIN No	SYMBOL	NAME AND FUNCTION
1	$\overline{OE}$	3 State output Enable Input (Active LOW)
2, 5, 6, 9, 12, 15, 16, 19	$\overline{Q0}$ to $\overline{Q7}$	3 State outputs
3, 4, 7, 8, 13, 14, 17, 18	D0 to D7	Data Inputs
11	LE	Latch Enable Input
10	GND	Ground (0V)
20	V_{CC}	Positive Supply Voltage

IEC LOGIC SYMBOLS

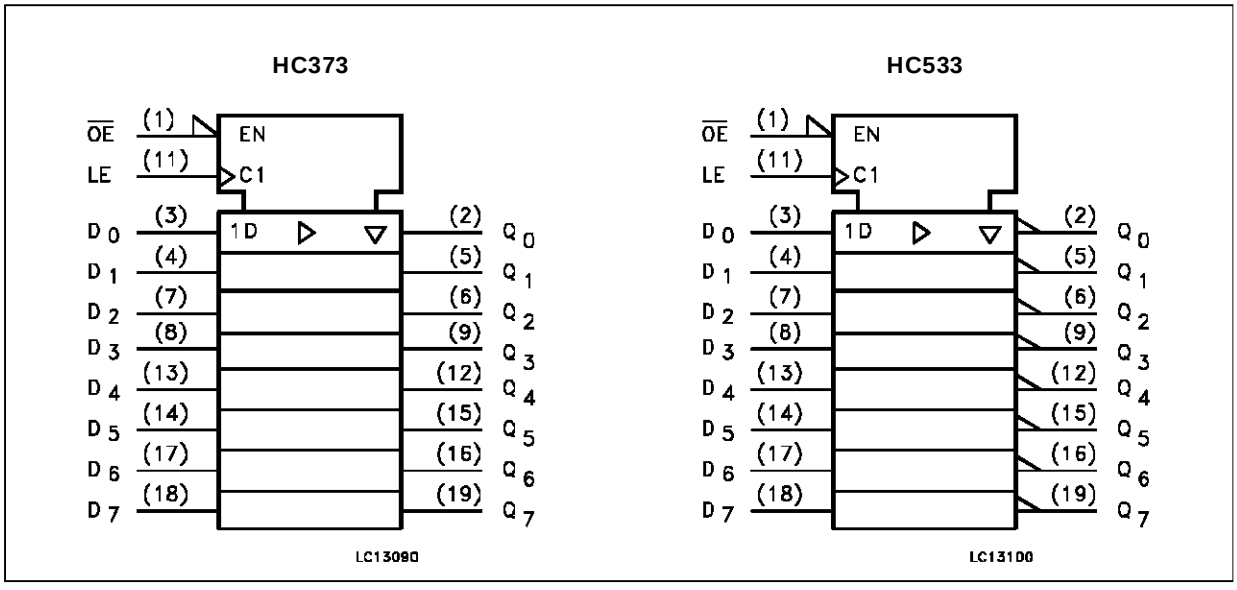

TRUTH TABLE

INPUTS			OUTPUTS	
$\overline{OE}$	LE	D	Q (HC373)	$\overline{Q}$ (HC533)
H	X	X	Z	Z
L	L	X	NO CHANGE *	NO CHANGE *
L	H	L	L	H
L	H	H	H	L

X: DON'T CARE
Z: HIGH IMPEDANCE
*: Q/$\overline{Q}$ OUTPUTS ARE LATCHED AT THE TIME WHEN THE LE INPUT IS TAKEN LOW LOGIC LEVEL.

LOGIC DIAGRAMS

HC373

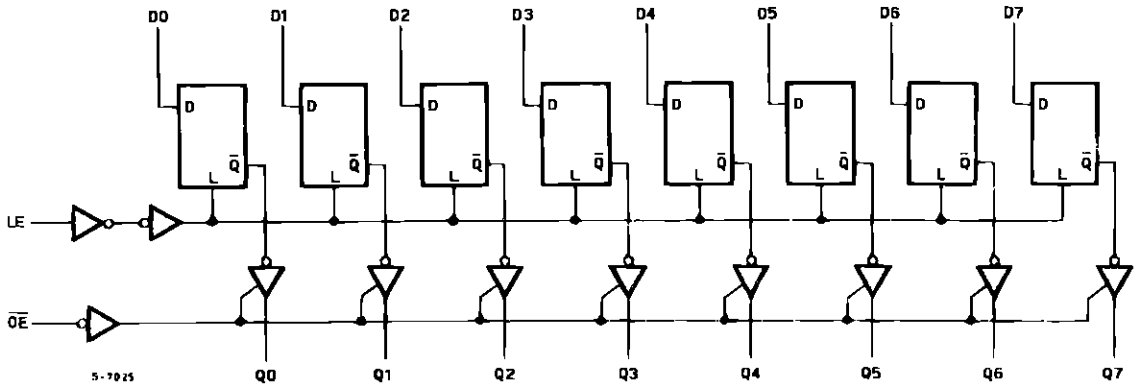

HC533

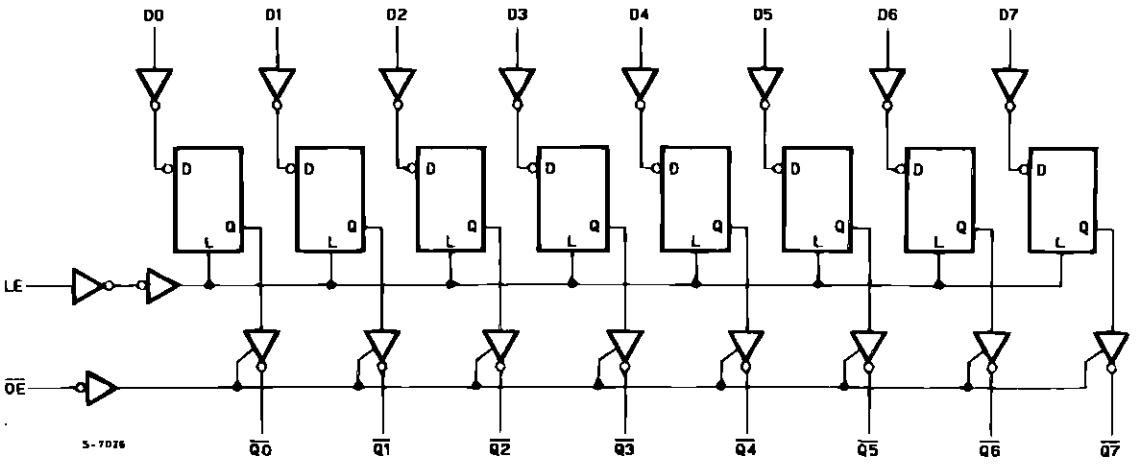

ABSOLUTE MAXIMUM RATINGS

Symbol	Parameter	Value	Unit
V_{CC}	Supply Voltage	-0.5 to +7	V
V_I	DC Input Voltage	-0.5 to V_{CC} + 0.5	V
V_O	DC Output Voltage	-0.5 to V_{CC} + 0.5	V
I_{IK}	DC Input Diode Current	± 20	mA
I_{OK}	DC Output Diode Current	± 20	mA
I_O	DC Output Source Sink Current Per Output Pin	± 35	mA
I_{CC} or I_{GND}	DC V_{CC} or Ground Current	± 70	mA
P_D	Power Dissipation	500 (*)	mW
T_{stg}	Storage Temperature	-65 to +150	°C
T_L	Lead Temperature (10 sec)	300	°C

Absolute Maximum Ratings are those values beyond which damage to the device may occur. Functional operation under these conditions is not implied.
(*) 500 mW: ≅ 65 °C derate to 300 mW by 10mW/°C: 65 °C to 85 °C

RECOMMENDED OPERATING CONDITIONS

Symbol	Parameter		Value	Unit
V_{CC}	Supply Voltage		2 to 6	V
V_I	Input Voltage		0 to V_{CC}	V
V_O	Output Voltage		0 to V_{CC}	V
T_{op}	Operating Temperature: **M54HC** Series **M74HC** Series		-55 to +125 -40 to +85	°C °C
t_r, t_f	Input Rise and Fall Time	V_{CC} = 2 V	0 to 1000	ns
		V_{CC} = 4.5 V	0 to 500	
		V_{CC} = 6 V	0 to 400	

DC SPECIFICATIONS

Symbol	Parameter	Test Conditions			Value							Unit
		V_{CC} (V)			T_A = 25 °C 54HC and 74HC			-40 to 85 °C 74HC		-55 to 125 °C 54HC		
					Min.	Typ.	Max.	Min.	Max.	Min.	Max.	
V_{IH}	High Level Input Voltage	2.0			1.5			1.5		1.5		V
		4.5			3.15			3.15		3.15		
		6.0			4.2			4.2		4.2		
V_{IL}	Low Level Input Voltage	2.0					0.5		0.5		0.5	V
		4.5					1.35		1.35		1.35	
		6.0					1.8		1.8		1.8	
V_{OH}	High Level Output Voltage	2.0	V_I = V_{IH} or V_{IL}	I_O=-20 µA	1.9	2.0		1.9		1.9		V
		4.5			4.4	4.5		4.4		4.4		
		6.0			5.9	6.0		5.9		5.9		
		4.5		I_O=-6.0 mA	4.18	4.31		4.13		4.10		
		6.0		I_O=-7.8 mA	5.68	5.8		5.63		5.60		
V_{OL}	Low Level Output Voltage	2.0	V_I = V_{IH} or V_{IL}	I_O= 20 µA		0.0	0.1		0.1		0.1	V
		4.5				0.0	0.1		0.1		0.1	
		6.0				0.0	0.1		0.1		0.1	
		4.5		I_O= 6.0 mA		0.17	0.26		0.33		0.40	
		6.0		I_O= 7.8 mA		0.18	0.26		0.33		0.40	
I_I	Input Leakage Current	6.0	V_I = V_{CC} or GND				±0.1		±1		±1	µA
I_{OZ}	3 State Output Off State Current	6.0	V_I = V_{IH} or V_{IL} V_O = V_{CC} or GND				±0.5		±5.0		±10	µA
I_{CC}	Quiescent Supply Current	6.0	V_I = V_{CC} or GND				4		40		80	µA

AC ELECTRICAL CHARACTERISTICS (C_L = 50 pF, Input $t_r = t_f$ = 6 ns)

Symbol	Parameter	Test Conditions			Value							Unit
		V_{CC} (V)	C_L (pF)		T_A = 25 °C 54HC and 74HC			-40 to 85 °C 74HC		-55 to 125 °C 54HC		
					Min.	Typ.	Max.	Min.	Max.	Min.	Max.	
t_{TLH} t_{THL}	Output Transition Time	2.0	50			25	60		75		90	ns
		4.5				7	12		15		18	
		6.0				6	10		13		15	
t_{PLH} t_{PHL}	Propagation Delay Time (LE, D - Q, $\overline{Q}$)	2.0	50			42	125		155		190	ns
		4.5				14	25		31		38	
		6.0				12	21		26		32	
		2.0	150			57	175		220		265	ns
		4.5				19	35		44		53	
		6.0				16	30		37		45	
t_{PZL} t_{PZH}	3 State Output Enable Time	2.0	50	R_L = 1 KΩ		39	125		155		190	ns
		4.5				13	25		31		38	
		6.0				11	21		26		32	
		2.0	150	R_L = 1 KΩ		54	175		220		265	ns
		4.5				18	35		44		53	
		6.0				15	30		37		45	
t_{PLZ} t_{PHZ}	3 State Output Disable Time	2.0	50	R_L = 1 KΩ		30	125		155		190	ns
		4.5				14	25		31		38	
		6.0				13	21		26		32	
$t_{W(H)}$	Minimum Pulse Width (LE)	2.0	50			15	75		95		110	ns
		4.5				6	15		19		22	
		6.0				6	13		16		19	
t_s	Minimum Set-up Time	2.0	50			16	50		65		75	ns
		4.5				4	10		13		15	
		6.0				3	9		11		13	
t_h	Minimum Hold Time	2.0	50				5		5		5	ns
		4.5					5		5		5	
		6.0					5		5		5	
C_{IN}	Input Capacitance					5	10		10		10	pF
C_{OUT}	Out put Capacitance					10						pF
C_{PD} (*)	Power Dissipation Capacitance					38						pF

(*) C_{PD} is defined as the value of the IC's internal equivalent capacitance which is calculated from the operating current consumption without load. (Refer to Test Circuit). Average operting current can be obtained by the following equation. $I_{CC}(opr) = C_{PD} \bullet V_{CC} \bullet f_{IN} + I_{CC}/8$ (per Flip Flop) and the CPD when n pcs of Flip Flop operate, can be gained by following equation: CPD (TOTAL) = 22 + 16 x n [pF]

SWITCHING CHARACTERISTICS TEST WAVEFORM

t_{PLH}, t_{PHL}, (D - Q, $\overline{Q}$)

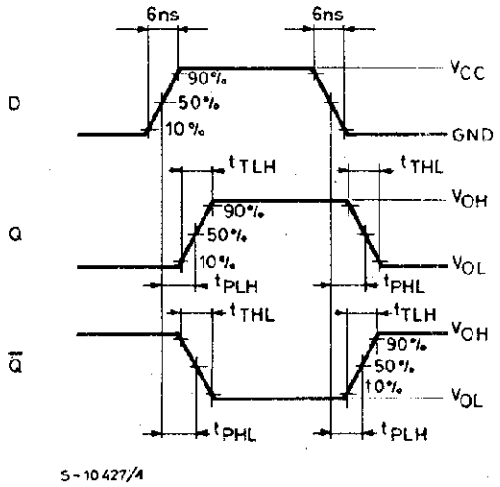

t_{PLH}, t_{PHL} (LE - Q, $\overline{Q}$), t_s, t_h, t_W

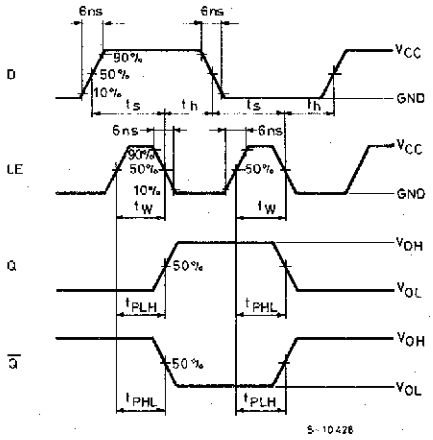

t_{PLZ}, t_{PZL}

The 1KΩ load resistors should be connected between outputs and V_{CC} line and the 50pF load capacitors should be connected between outputsand GND line.
All inputs except $\overline{OE}$ input should be connected to V_{CC} line or GND line such that outputs will be in low logic level while $\overline{OE}$ input is held low.

t_{PHZ}, t_{PZH}

The 1KΩ load resistors and the 50pF load capacitors should be connected between each output and GND line.
All inputs except $\overline{OE}$ input should be connected to V_{CC} or GND line such that output will be in high logic level while $\overline{OE}$ input is held low.

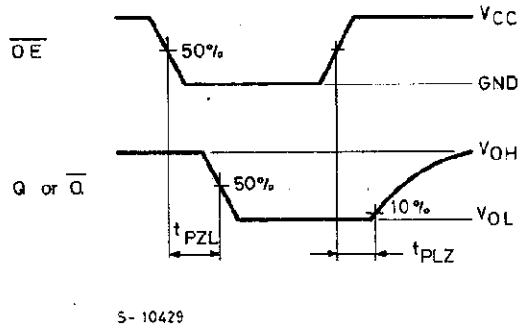

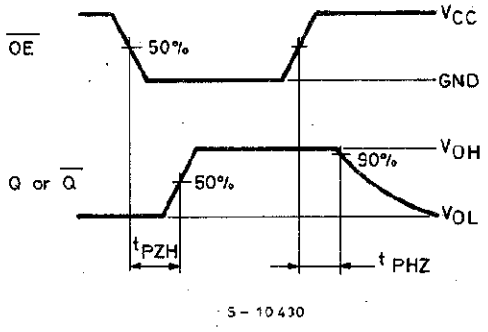

TEST CIRCUIT I_{CC} (Opr.)

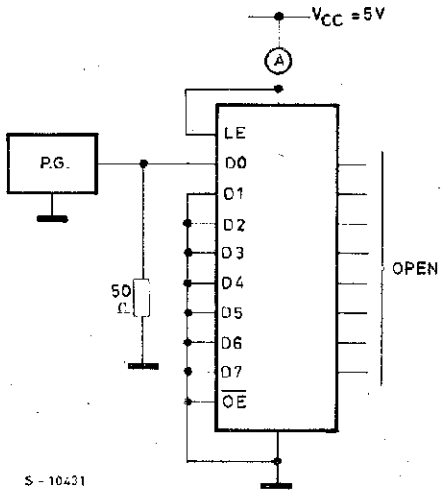

INPUT WAVEFORM IS THE SAME AS THAT IN CASE OF SWITCHING CHARACTERISTICS TEST.

Plastic DIP20 (0.25) MECHANICAL DATA

DIM.	mm			inch		
	MIN.	TYP.	MAX.	MIN.	TYP.	MAX.
a1	0.254			0.010		
B	1.39		1.65	0.055		0.065
b		0.45			0.018	
b1		0.25			0.010	
D			25.4			1.000
E		8.5			0.335	
e		2.54			0.100	
e3		22.86			0.900	
F			7.1			0.280
I			3.93			0.155
L		3.3			0.130	
Z			1.34			0.053

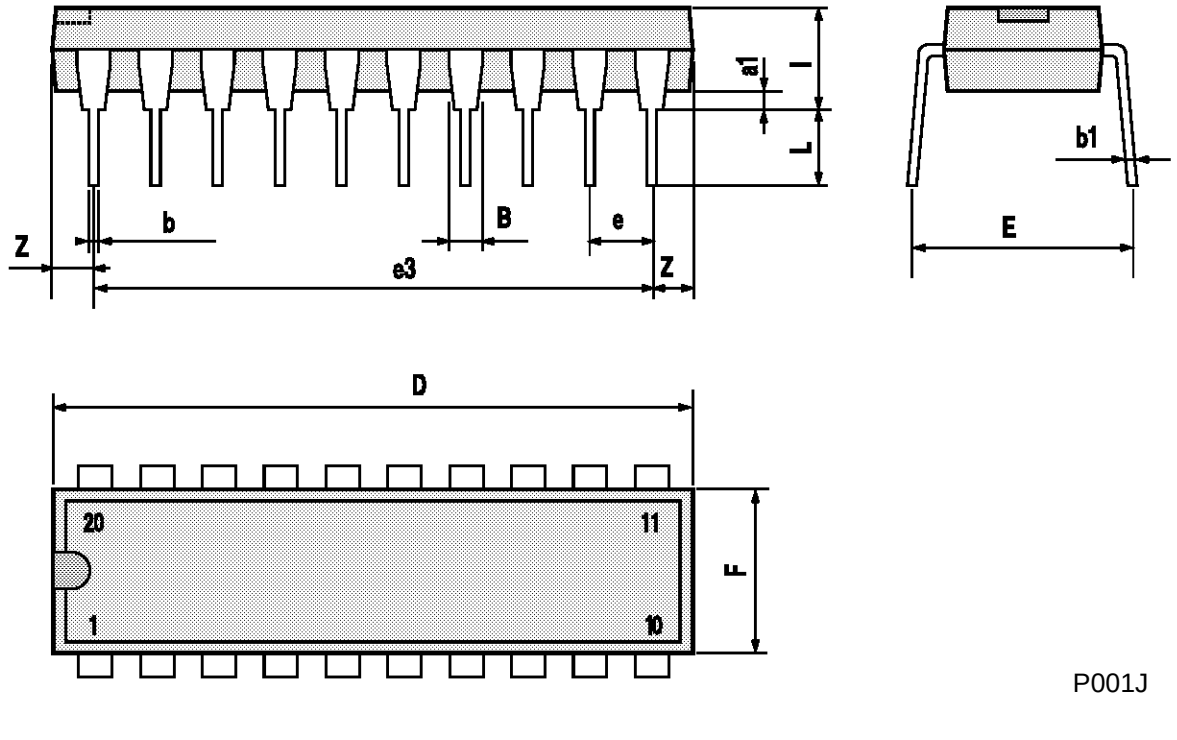

P001J

Ceramic DIP20 MECHANICAL DATA

DIM.	mm			inch		
	MIN.	TYP.	MAX.	MIN.	TYP.	MAX.
A			25			0.984
B			7.8			0.307
D		3.3			0.130	
E	0.5		1.78	0.020		0.070
e3		22.86			0.900	
F	2.29		2.79	0.090		0.110
G	0.4		0.55	0.016		0.022
I	1.27		1.52	0.050		0.060
L	0.22		0.31	0.009		0.012
M	0.51		1.27	0.020		0.050
N1	4° (min.), 15° (max.)					
P	7.9		8.13	0.311		0.320
Q			5.71			0.225

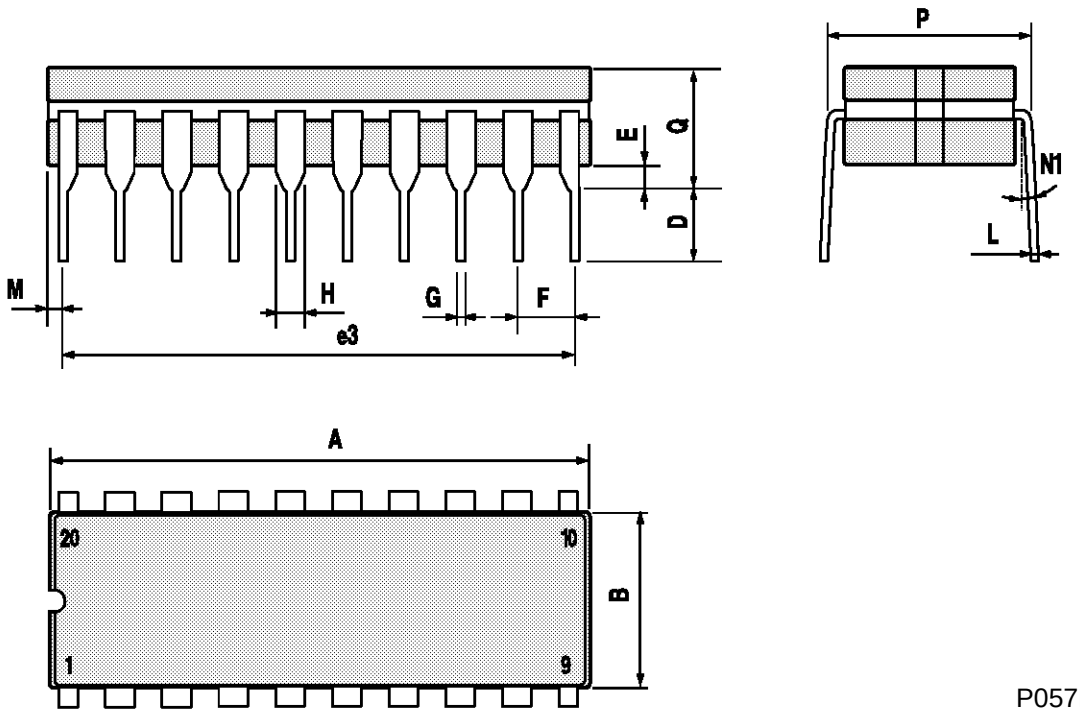

P057H

SO20 MECHANICAL DATA

DIM.	mm			inch		
	MIN.	TYP.	MAX.	MIN.	TYP.	MAX.
A			2.65			0.104
a1	0.10		0.20	0.004		0.007
a2			2.45			0.096
b	0.35		0.49	0.013		0.019
b1	0.23		0.32	0.009		0.012
C		0.50			0.020	
c1	45° (typ.)					
D	12.60		13.00	0.496		0.512
E	10.00		10.65	0.393		0.419
e		1.27			0.050	
e3		11.43			0.450	
F	7.40		7.60	0.291		0.299
L	0.50		1.27	0.19		0.050
M			0.75			0.029
S	8° (max.)					

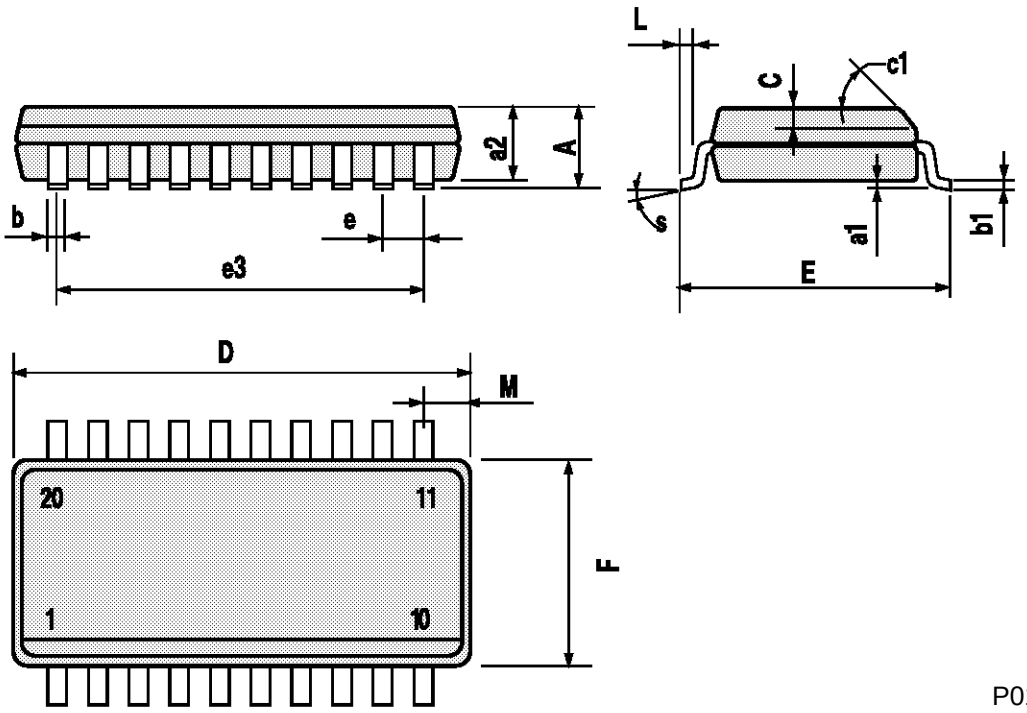

P013L

PLCC20 MECHANICAL DATA

DIM.	mm			inch		
	MIN.	TYP.	MAX.	MIN.	TYP.	MAX.
A	9.78		10.03	0.385		0.395
B	8.89		9.04	0.350		0.356
D	4.2		4.57	0.165		0.180
d1		2.54			0.100	
d2		0.56			0.022	
E	7.37		8.38	0.290		0.330
e		1.27			0.050	
e3		5.08			0.200	
F		0.38			0.015	
G			0.101			0.004
M		1.27			0.050	
M1		1.14			0.045	

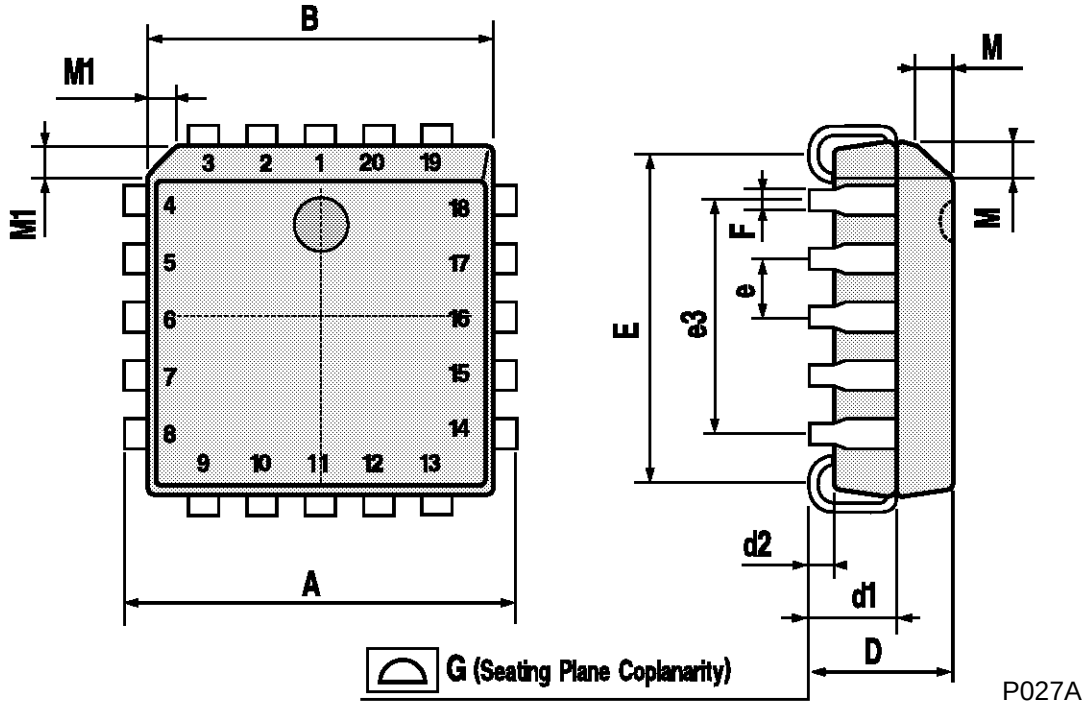

Information furnished is believed to be accurate and reliable. However, SGS-THOMSON Microelectronics assumes no responsability for the consequences of use of such information nor for any infringement of patents or other rights of third parties which may results from its use. No license is granted by implication or otherwise under any patent or patent rights of SGS-THOMSON Microelectronics. Specifications mentioned in this publication are subject to change without notice. This publication supersedes and replaces all information previously supplied.
SGS-THOMSON Microelectronics products are not authorized for use as critical components in life support devices or systems without express written approval of SGS-THOMSON Microelectonics.

© 1994 SGS-THOMSON Microelectronics - All Rights Reserved

SGS-THOMSON Microelectronics GROUP OF COMPANIES
Australia - Brazil - France - Germany - Hong Kong - Italy - Japan - Korea - Malaysia - Malta - Morocco - The Netherlands - Singapore - Spain - Sweden - Switzerland - Taiwan - Thailand - United Kingdom - U.S.A