NLSF2500

Keypad Multiplexer

The NLSF2500 is a keyboard multiplexer fabricated in sub−micron silicon CMOS Technology. The NLSF2500 is designed to operate over wide operating voltage, with minimum power consumption and very low voltage drop from V_{CC}. The device saves dozens of active and passive components and permits operating voltage far lower than the standard diode scheme.

ON Semiconductor®

http://onsemi.com

Features

- Single Supply Operation
- Optimized for 1.8 V to 3.6 V V_{CC}
- Tiny 3 x 3 mm QFN−16 Package
- Conforms to: JEDEC MO−220, Issue H, Variation VEED−6
- Very Low Voltage Drop
- Permits Operation Down to 1.65 V
- Near Zero Static Power
- ESD Protection: Human Body Model (HBM); > 3000 V, Machine Model (MM); >300 V
- Latchup Maximum Rating: 200 mA
- Pin−to−Pin Compatible with CM2500
- This is a Pb−Free Device

Typical Applications

- Cell Phones
- PDAs
- MP3 players

QFN−16
CASE 485AE

MARKING DIAGRAM

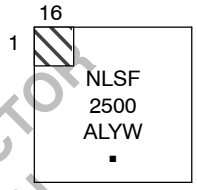

XXXX = Specific Device Code
A = Assembly Location
L = Wafer Lot
Y = Year
W = Work Week
▪ = Pb−Free Package

PIN CONNECTIONS

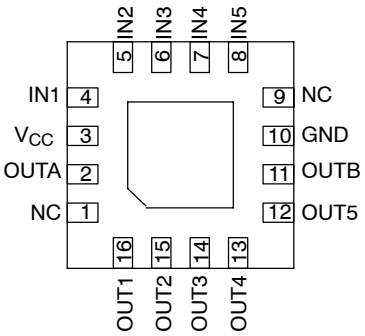

Bottom View

ORDERING INFORMATION

See detailed ordering and shipping information in the package dimensions section on page 4 of this data sheet.

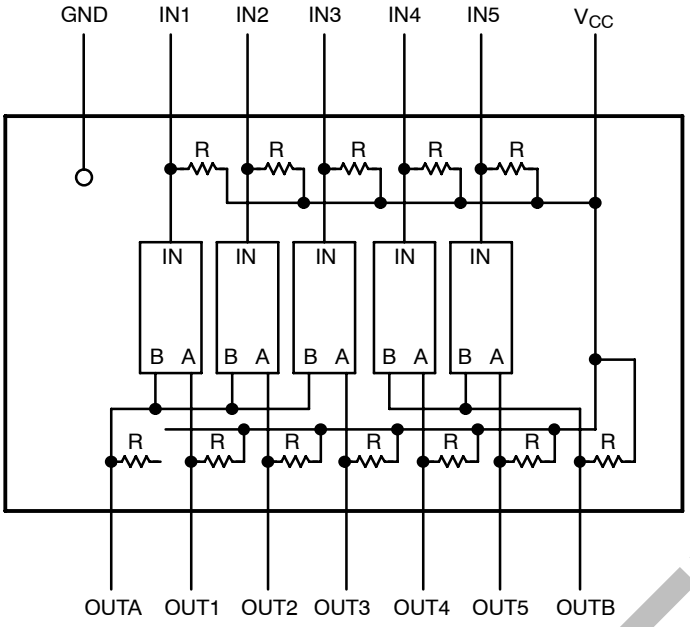

Figure 1. Device Block Diagram

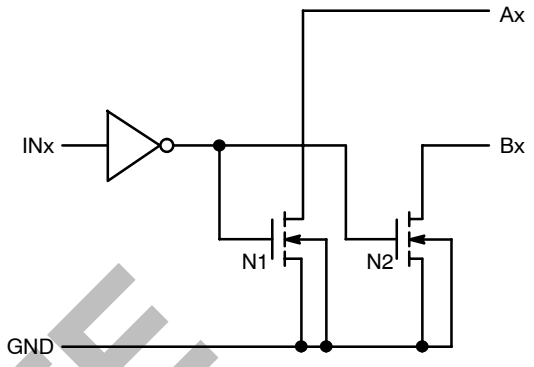

Figure 2. Circuit Schematic (1 Channel Pair Only)

PIN DESCRIPTION

Pin	Name	Function Description
1	NC	Not Internally Connected
2	OUTA	Combined “Functional OR” Output of IN1, IN2, and IN3
3	V_{CC}	Supply Pin
4	IN1	Input 1 from Switch to be Multiplexed
5	IN2	Input 2 from Switch to be Multiplexed
6	IN3	Input 3 from Switch to be Multiplexed
7	IN4	Input 4 from Switch to be Multiplexed
8	IN5	Input 5 from Switch to be Multiplexed
9	NC	Not Internally Connected
10	GND	Ground
11	OUTB	Combined “Functional OR” Output of IN4 and IN5
12	OUT5	Output 5 for Keyboard Interface Lines
13	OUT4	Output 4 for Keyboard Interface Lines
14	OUT3	Output 3 for Keyboard Interface Lines
15	OUT2	Output 2 for Keyboard Interface Lines
16	OUT1	Output 1 for Keyboard Interface Lines

MAXIMUM RATINGS

Symbol	Rating		Value	Unit
V_{CC}	DC Supply Voltage		−0.5 to +7.0	V
V_I	DC Input Voltage		$0 \leq V_{CC} \leq V_{CC} + 0.5$	V
V_O	DC Output Voltage		− 0.5 to + 7.0	V
I_{IK}	DC Input Diode Current	V_I < GND	±50	mA
I_{OK}	DC Output Diode Current	V_O = GND	− 50	mA
I_O	DC Output Sink Current		± 50	mA
I_{CC}	DC Supply Current per Supply Pin		± 100	mA
I_{GND}	DC Ground Current per Ground Pin		± 100	mA
T_{STG}	Storage Temperature Range		− 65 to + 150	°C
T_L	Lead Temperature, 1 mm from Case for 10 Seconds		260	°C
T_J	Junction Temperature under bias		+ 150	°C
θ_{JA}	Thermal Resistance		80	°C/W
P_D	Power Dissipation in Still Air at 85°C		800	mW
MSL	Moisture Sensitivity		Level 1	
F_R	Flammability Rating	Oxygen Index: 28 to 34	UL 94 V−0 @ 0125 in	
V_{ESD}	ESD Test Voltage	Human Body Model (Note 1) Machine Model (Note 2)	> 3000 > 300	V

Stresses exceeding Maximum Ratings may damage the device. Maximum Ratings are stress ratings only. Functional operation above the Recommended Operating Conditions is not implied. Extended exposure to stresses above the Recommended Operating Conditions may affect device reliability.

1. Tested to EIA/JESD22−A114−A.
2. Tested to EIA/JESD22−A115−A.

RECOMMENDED OPERATING CONDITIONS

Symbol	Characteristics	Min	Max	Unit
V_{CC}	Positive DC Supply Voltage	1.5	5.5	V
V_{IN}	DC Input Voltage	GND	V_{CC} + 0.5	V
V_{OUT}	DC Output Voltage	GND	5.5	V
T_A	Operating Temperature Range	40	85	°C

DC CHARACTERISTICS

Symbol	Parameter	Condition	V_{CC}	Min	Max	Unit
V_{IL}	Input Logic Low Voltage		1.65 − 3.6	0.3 * V_{CC}		V
V_{IH}	Input Logic High Voltage		1.65 − 3.6		0.7 * V_{CC}	V
R_{OUT}	OUT_x Pullup Resistance		1.65 − 3.6	50	150	kΩ
R_{IN} 2.7	INx Pullup Resistance	PIN = GND	2.7	50	150	kΩ
R_{IN} 1.8	INx Pullup Resistance	PIN = GND	1.8	100	360	kΩ
V_D	Voltage Drop	INx = GND, I_{OUT} = 100 μA			100	mV
I_{CC}	Quiescent Current	All I/O Floating	1.65 − 3.6		10	μA
I_L	Output Leakage Current	INx = Floating			1.0	μA
C_P	I/O Pin Capacitance	1.0 MHz	2.5		15	pF

ORDERING INFORMATION

Device Order Number	Device Nomenclature					Package Type	Tape & Reel Size†
	Circuit Indicator	Technology	Device Function	Package Suffix	Tape and Reel Suffix		
NLSF2500MN1R2G	NL	SF	2500	MN1	R2	QFN−16 (Pb−Free)	3000

†For information on tape and reel specifications, including part orientation and tape sizes, please refer to our Tape and Reel Packaging Specifications Brochure, BRD8011/D.

PACKAGE DIMENSIONS

QFN−16 3*3*0.85 MM, 0.5 P
CASE 485AE−01
ISSUE O

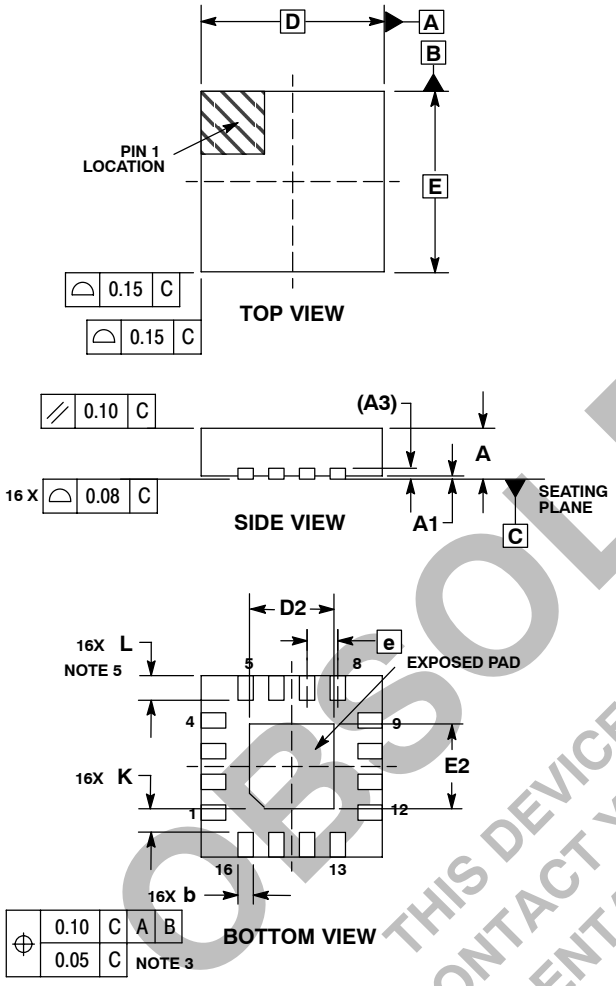

NOTES:
1. DIMENSIONING AND TOLERANCING PER ASME Y14.5M, 1994.
2. CONTROLLING DIMENSION: MILLIMETERS.
3. DIMENSION b APPLIES TO PLATED TERMINAL AND IS MEASURED BETWEEN 0.25 AND 0.30 MM FROM TERMINAL.
4. COPLANARITY APPLIES TO THE EXPOSED PAD AS WELL AS THE TERMINALS.
5. OUTLINE MEETS JEDEC DIMENSIONS PER MO−220, VARIATION VEED−6.

	MILLIMETERS		
DIM	MIN	NOM	MAX
A	0.800	0.900	1.000
A1	0.000	0.025	0.050
A3	0.200 REF		
b	0.180	0.250	0.300
D	3.00 BSC		
D2	1.250	1.40	1.550
E	3.00 BSC		
E2	1.250	1.40	1.550
e	0.500 BSC		
K	0.200	–––	–––
L	0.300	0.400	0.500

PUBLICATION ORDERING INFORMATION

LITERATURE FULFILLMENT:
Literature Distribution Center for ON Semiconductor
P.O. Box 5163, Denver, Colorado 80217 USA
Phone: 303−675−2175 or 800−344−3860 Toll Free USA/Canada
Fax: 303−675−2176 or 800−344−3867 Toll Free USA/Canada
Email: orderlit@onsemi.com

N. American Technical Support: 800−282−9855 Toll Free USA/Canada
Europe, Middle East and Africa Technical Support:
Phone: 421 33 790 2910
Japan Customer Focus Center
Phone: 81−3−5773−3850

ON Semiconductor Website: **www.onsemi.com**

Order Literature: http://www.onsemi.com/orderlit

For additional information, please contact your local Sales Representative